This is a digital copy of a book that was preserved for generations on library shelves before it was carefully scanned by Google as part of a project to make the world's books discoverable online.

It has survived long enough for the copyright to expire and the book to enter the public domain. A public domain book is one that was never subject to copyright or whose legal copyright term has expired. Whether a book is in the public domain may vary country to country. Public domain books are our gateways to the past, representing a wealth of history, culture and knowledge that's often difficult to discover.

Marks, notations and other marginalia present in the original volume will appear in this file - a reminder of this book's long journey from the publisher to a library and finally to you.

Usage guidelines

Google is proud to partner with libraries to digitize public domain materials and make them widely accessible. Public domain books belong to the public and we are merely their custodians. Nevertheless, this work is expensive, so in order to keep providing this resource, we have taken steps to prevent abuse by commercial parties, including placing technical restrictions on automated querying.

We also ask that you:

+ *Make non-commercial use of the files* We designed Google Book Search for use by individuals, and we request that you use these files for personal, non-commercial purposes.

+ *Refrain from automated querying* Do not send automated queries of any sort to Google's system: If you are conducting research on machine translation, optical character recognition or other areas where access to a large amount of text is helpful, please contact us. We encourage the use of public domain materials for these purposes and may be able to help.

+ *Maintain attribution* The Google "watermark" you see on each file is essential for informing people about this project and helping them find additional materials through Google Book Search. Please do not remove it.

+ *Keep it legal* Whatever your use, remember that you are responsible for ensuring that what you are doing is legal. Do not assume that just because we believe a book is in the public domain for users in the United States, that the work is also in the public domain for users in other countries. Whether a book is still in copyright varies from country to country, and we can't offer guidance on whether any specific use of any specific book is allowed. Please do not assume that a book's appearance in Google Book Search means it can be used in any manner anywhere in the world. Copyright infringement liability can be quite severe.

About Google Book Search

Google's mission is to organize the world's information and to make it universally accessible and useful. Google Book Search helps readers discover the world's books while helping authors and publishers reach new audiences. You can search through the full text of this book on the web at `http://books.google.com/`

Machine tools and their operation ...

Fred Herbert Colvin, Frank Arthur Stanley

Digitized by Google

Digitized by Google

Digitized by Google

Digitized by Google

MACHINE TOOLS AND THEIR OPERATION

Digitized by Google

McGraw-Hill Book Co. Inc.
PUBLISHERS OF BOOKS FOR
Electrical World ▽ Engineering News-Record
Power ▽ Engineering and Mining Journal-Press
Chemical and Metallurgical Engineering
Electric Railway Journal ▽ Coal Age
American Machinist ▽ Ingenieria Internacional
Electrical Merchandising ▽ BusTransportation
Journal of Electricity and Western Industry
Industrial Engineer

Digitized by Google

MACHINE TOOLS
AND
THEIR OPERATION

PART I
LATHES, DRILLS AND DRILLING, HAND AND AUTOMATIC SCREW MACHINES, SCREW MACHINE TOOLS AND BORING

BY

FRED H. COLVIN

Editor, American Machinist; Member, A. S. M. E.; Author, American Machinists' Handbook, Machine Shop Calculations, Machine Shop Drawings, Machine Shop Mechanics, Machine Shop Primer, Machine Shop Arithmetic, American Machinists' Grinding Book, etc., etc.

AND

FRANK A. STANLEY

Editor, Stanley's Journal of Machinery; Formerly Associate Editor, American Machinist; Member, A. S. M. E.; Author, American Machinists' Handbook, Accurate Tool Work, Automatic Screw Machines, Machine Shop Primer, Punches and Dies, Tool and Gage Work, American Machinists' Grinding Book, etc., etc.

FIRST EDITION
SECOND IMPRESSION

McGRAW-HILL BOOK COMPANY, INC.
NEW YORK: 370 SEVENTH AVENUE
LONDON: 6 & 8 BOUVERIE ST., E. C. 4
1922

Digitized by Google

E. Engin
TJ
1185
.C72 1922

COPYRIGHT 1922, BY THE
McGRAW-HILL BOOK COMPANY, INC.

PRINTED IN THE UNITED STATES OF AMERICA

Digitized by Google

Engineer.
Wahr
9-26-23
9084
2 v.

9-26-23 V.W.

PREFACE

THE lathe and drilling machines rank high among the basic machines used in the shop. They date back many centuries and afford great opportunities for ingenuity in adapting them to a great variety of work. While only a limited number of examples of the kind of work which can be done can be given in this volume, it has been our aim to show the fundamental principles involved in operating each machine. With these thoroughly understood it is easy to adapt the machines to a variety of uses.

Drilling is one of the most common of operations and yet many possibilities of greater efficiency of operation seem to have been overlooked. The shape of the cutting edges, clearance, lubrication, speed and feed are all important and should be studied carefully.

Hand screw machines or turret lathes and automatic screw machines are an outgrowth of the engine lathe. Their uses are gradually being extended and it is necessary for any thorough mechanic at least to understand the principles involved. It has been our endeavor to make the operation of all these machines clear in every way.

THE AUTHORS.

NEW YORK, N. Y.
June, 1922.

Digitized by Google

Digitized by Google

CONTENTS

PREFACE v

SECTION I

PAGE

LATHES, CHAPTERS I TO VIII 1
A Fundamental Machine—Work Held between Centers—Driving and Turning the Work—Steady and Follower Rests and Face Plate Work—Chucks, Chucking and Boring Tools—Taper Turning and Boring—Thread Cutting—The Lathe Indicator and Other Suggestions.

SECTION II

DRILLS AND DRILLING, CHAPTERS I TO IV 77
Drills—Drilling Tools—A Few Drilling Kinks—Jobbing Work on the Drilling Machine.

SECTION III

HAND AND AUTOMATIC SCREW MACHINES, CHAPTERS I TO VIII 105
Turret Lathes and Hand Screw Machines—Camming the Pratt & Whitney Automatic Screw Machine—The Brown & Sharpe Automatic Screw Machine—Laying-out Brown & Sharpe Screw Machine Cams—The Cleveland Automatic Turret Machine and Its Cam Adjustments—The Acme Multiple-Spindle Automatic Screw Machine.

SECTION IV

SCREW MACHINE TOOLS, CHAPTERS VII TO XVI 197
Automatic and Semi-automatic Chucking and Turning Machine—Points in Setting Up and Operating Automatic Screw Machine—Speeds and Feeds for Screw Machine Work—Spring Collets and Feed Chucks—Box Tools and Other External Cutting Appliance—Drills, Counterbores, and Other Internal Cutting Tools—Screw Machine Taps and Dies—Forming Tools and Methods of Making Them—Nurling Tools and Their Applications—Why Chips Cling to Screw Machine Tools.

SECTION V

BORING, CHAPTERS I TO VI 285
Boring Machines and Their Work—The Horizontal Machine in the Railroad Shop—Unusual Work on a Boring Machine—The Vertical Boring Machine or Mill—Methods of Holding Work to be Turned and Bored—Boring Mill Fixtures.

INDEX 339

Digitized by Google

Digitized by Google

MACHINE TOOLS AND THEIR OPERATION

PART I

INCLUDING

LATHES, DRILLS, HAND AND AUTOMATIC SCREW MACHINES AND BORING

SECTION I

LATHES

CHAPTER I

A FUNDAMENTAL MACHINE

The engine or screw-cutting lathe is generally considered to be the fundamental machine tool, the machine on which a good mechanic can do almost any kind of a job which comes along. With the addition of a planer, a shop can handle practically any job of either flat or circular work.

While an engine lathe is primarily for turning work held between centers or in a chuck of some kind, and for boring work which is either chucked or held on a face plate, it can also be used for boring work which is bolted to the carriage, milling attachments of various kinds are made for it and many a drill press job has been handled on the lathe.

In modern manufacturing, however, the lathe has very largely become a plain turning machine, and is used principally for roughing out work to be finished on the grinding machine. In many cases the lathe never cuts a thread as in former days, this being done on a thread miller or special threading lathe.

In the small tool room, however, the lathe is still used in nearly all its capacities, and there are many shops doing jobbing or repair work where the lathe still maintains its old time importance, where the men who handle it must know how to handle any kind of work which comes along. But no matter how the lathe is used, the principles which underlie its operation should be thoroughly understood.

Digitized by Google

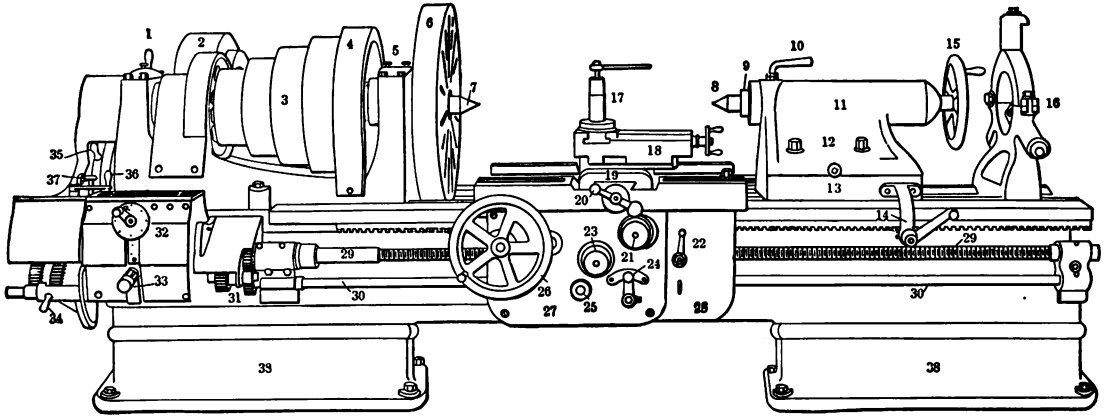

LATHE—ENGINE

Lathe, Engine—Parts of

1. Rear bearing.
2. Back-gear case.
3. Cone pulley.
4. Face-gear guard.
5. Front bearing.
6. Face plate.
7. Live center.
8. Dead center.
9. Tail spindle.
10. Tail-spindle lock.
11. Tailstock slide.
12. Locking bolts.
13. Tailstock base.
14. Tailstock pinion.
15. Tailstock hand wheel.
16. Steady rest.
17. Tool post.
18. Compound rest.
19. Cross-slide.
20. Cross-feed screw.
21. Cross-power feed.
22. Half-nut handle.
23. Regular power feed.
24. Feed reverse.
25. Gear stud.
26. Hand feed.
27. Front apron.
28. Rear apron.
29. Lead screw
30. Feed rod.
31. Feed gears.
32. Feed box.
33. Change-gear handle.
34. Compound gears.
35. Change-gear handle.
36. Change-gear handle
37. Change-year handle.
38. Bed.

Digitized by Google

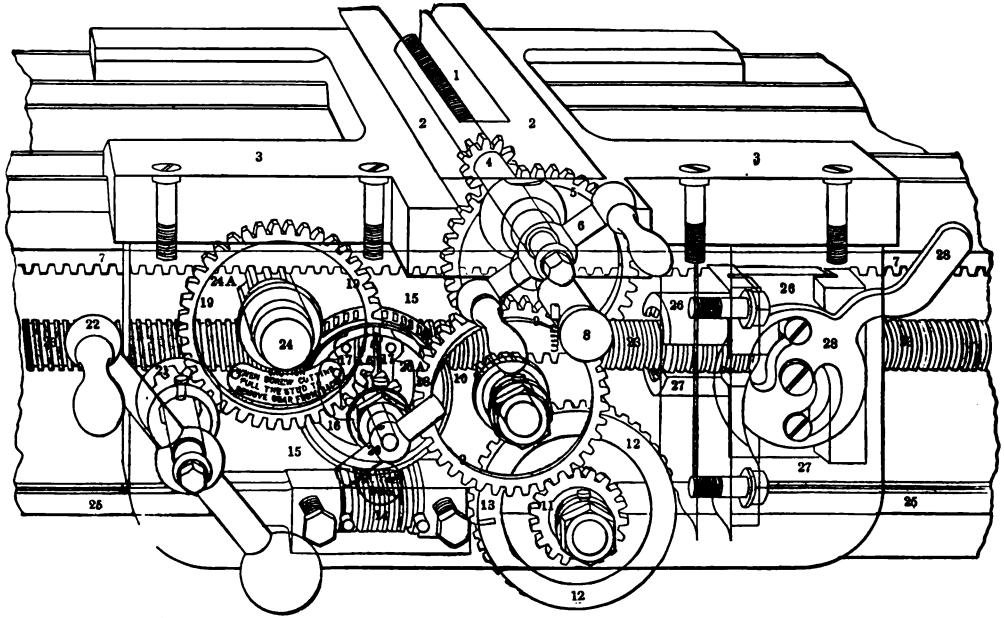

Lathe Apron, Reed—Parts of

1. Cross-feed screw.
2. Cross-slides.
3. Wing of saddle.
4. Cross-feed pinion.
5. Cross-feed gear.
6. Cross-feed handle.
7. Rack.
8. Power cross-feed and control.
9. Gear in train.
10. Pinion for cross-feed.
11. Main driving pinion.
12. Bevel gear.
13. Bevel pinion.
14. Feed-worm.
15. Feed-worm wheel.
16. Clutch ring.
17. Clutch levers.
18. Pinion.
19. Gear in train.
20. Feed-clutch handle.
20A. Clutch spreader.
21. Hand pinion.
22. Carriage handle.
23. Lead screw.
24. Rack pinion knob.
24A. Rack pinion.
25. Feed rod.
26. Upper-half nut.
27. Lower-half nut.
28. Half-nut cam.

NOTE:—Cross-feed is from bevel pinion 13, through gears 12, 11, 9, 10, and 4. Regular feed is through worm 14, worm wheel 15, clutch 16, pinion 18, gears 19 and 24A. Hand movement is through handle 22, pinion 21, 19 and 24A.

Digitized by Google

CHAPTER II

WORK HELD BETWEEN CENTERS

The centering of work may be divided into two parts—first locating the center and then drilling and countersinking to fit the centers of the lathe. Several methods of locating the center are shown in Figs. 1 to 11. Some prefer to use chalk or soapstone on the end of the bar so that the marks will show more plainly.

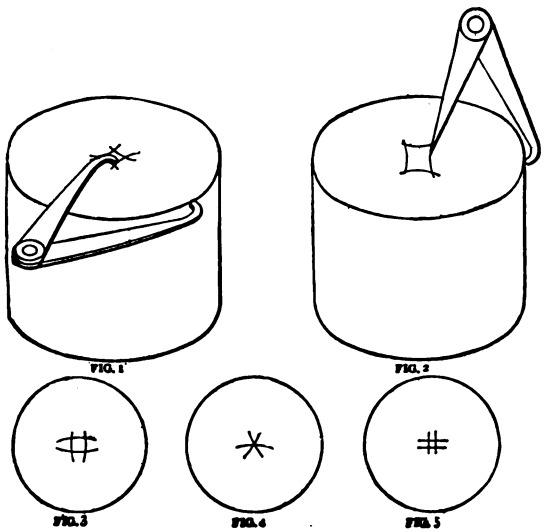

FIGS. 1–5.—Centering the end of a bar.

Fig. 1 shows the end of a round bar marked by taking a pair of calipers set with a little less than half the diameter of the bar, and marked as shown. It is then easy to locate the center with a punch, between these marks. Fig. 2 shows the same thing done with the caliper known as a "hermaphrodite," which has one regular caliper leg, and the other a divider leg. These are much used by some for laying out work of various kinds, but for most purposes the regular caliper with rather small points, will answer all purposes. Fig. 3

Digitized by Google

shows the markings when a little more than half the diameter is used, while in Fig. 4 the marking is from three points and with exactly half the diameter. Most mechanics prefer the open space in the center as there is apt to be a confusion of lines if the markings meet.

Another method is to lay the bar on the bench with the end on a plate or even on a level spot in the bench, and place a lathe tool or other piece of steel against the end, so as to come a little above or below the center of the bar. Then the scriber is used to draw lines, as in Fig. 5, by turning the bar into three or four positions.

The surface gage method, as indicated in Fig. 6, is very similar. The bar rests in a V block, although this is more of a convenience than a necessity, and both bar and surface gage rest on a smooth surface of some kind, such as an iron bench. The marking is done by moving the surface gage scriber across the end, as indicated in the drawing.

The "center square," either as a separate tool or in one of the combination sets, is another method and one that is quicker than any of those mentioned. Placed across the end of a round bar it allows a line to be drawn directly across the center, as shown in Fig. 7, without regard to the diameter of the bar, as will be seen from the smaller bars, indicated by dotted lines. Turning the bar or the center square part way around the end gives a mark across the first and locates the center where they cross.

The centers of square or rectangular bars can also be found by calipers in the same way as indicated by Fig. 8. The center square does not work as well as calipers or dividers in this case, and should be kept for round work.

The self-centering punch, shown in Fig. 9, is quite popular in many shops, and is a great time-saver, but should be used with a little care. When held squarely over the end of a round bar, a blow on the punch will mark the center with fair accuracy. If it is not held squarely or the end of the bar is not square, the punch mark may be away off the center, as shown in Figs. 10 and 11.

Another way that used to be more common than it is now that centering machines are used so much more than formerly, is shown in Figs. 12 and 13. A block of cast iron or machine steel is turned up and threaded to fit the screw plate of a 3-jawed universal chuck. This was bored or drilled true and a center punch turned up to fit without shake, or a good sliding fit. The block was then screwed into the chuck, and the piece to be centered gripped in the chuck, when a blow on the punch would locate the center, the same as the cone-shaped device shown in Fig. 9.

Digitized by Google

Forgings are often quite uneven, as shown with some exaggeration in Fig. 14. In such a case it is well to chalk the entire end, punch a very light mark at what seems to be the center, and try it with dividers until the circle drawn shows it to be about even on each side. If you make too deep a center-punch mark before getting it just right, you

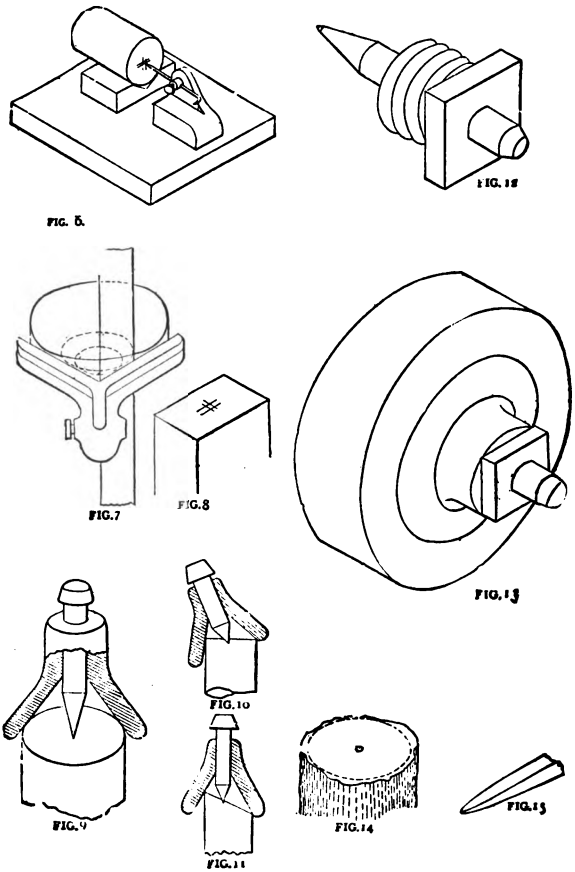

FIGS. 6–15.—Centering work.

can move it a little, either by holding the punch at an angle, and forcing it over in the desired direction, or by using a "drawing chisel" like Fig. 15, which is simply a cold chisel with a small, round point. This will cut a small chip out of the punch mark on the side toward the center, then the center drill will start right.

Digitized by Google

CENTERING IN THE LATHE

In some cases bars to be centered are gripped in a chuck in the lathe, the outer end supported and held true by a steady rest, and the center drilled by a drill or center drill carried in the tailstock of the lathe. Where there are many pieces of a kind to center, and no centering machine, this is a very good way. The steady-rest guides are set centrally for this size bar, the chuck is set so that the loosening of one jaw in a three-jawed chuck, or of two jaws in a four-jawed chuck, will release the bar, and allow another to be clamped in the same position. Universal chucks are also used for this work in which all jaws move to close or open on a piece of work. For centering they are, perhaps,

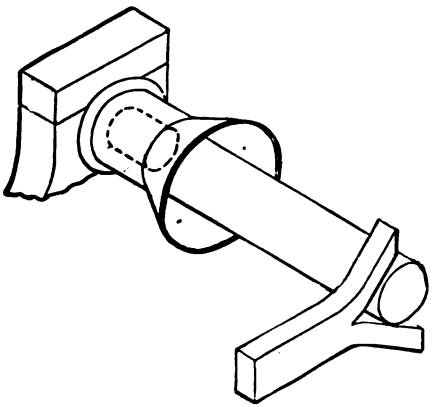

FIG. 16.—Using a cone center.

the handiest, but independent chucks can be used with success in the way indicated.

Some use a hollow-cone center in the live spindle, as shown in Fig. 16, which drives the bar by friction, and also supports that end of it. The other is held by a "cutting" center, sometimes known as a square center, in the tail spindle. The bar is then revolved and the forked or Y centering tool, held in the tool-post, is forced against it until the end runs true, then the cutting center is forced in far enough to mark it plainly, and the work is done for that end. Reversing the bar enables the other end to be done in the same way.

A little practice enables this to be done very rapidly, and the lathe need not be stopped until the whole lot is done, as the bars can be put in and taken out of the cone with it running as fast as necessary. This cone-driving chuck can also be used in combination with the

Digitized by Google

steady rest, but it is not as convenient or as safe to handle with the lathe running as with the forked centering tool in the tool-post.

Still another improvement, as to saving of time, on a lot of bars of the same size, is to put the hollow-cone center on the tail spindle, set the steady-rest guides in the correct position up near the head-stock, run the center drill in a drill chuck in the live spindle, and simply lay the bars into the steady rest and feed against the drill by the tail spindle.

For centering short work held in a chuck, the lathe tool, shown in Fig. 17, is often used. This has what is practically a flat drill point, moved to the center of the piece and forced against it either by the

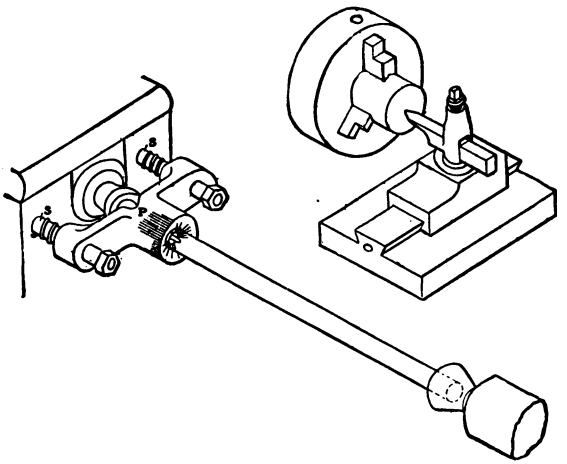

FIGS. 17–18.—Centering in a chuck and a cheap centering lathe.

carriage or by the dead center bearing against the back end of the tool. This can be used in long work with the end supported by a steady rest or with a forked tool, as shown in Fig. 16. Some prefer it to the "cutting" center.

IMPROVISED CENTERING MACHINE

If there is no centering machine in the shop a very good substitute can be made of a small speed lathe, or it can be made removable if desired, so the lathe can be used for other things when not needed for this work, as illustrated in Fig. 18.

Drill and tap into the head for the studs *S S*, in line with the spindle. Make the studs long enough to take the centering piece *P* and allow the drill chuck and center reamer behind it, and stiff enough to guide well and not be easily bent by accident, say $\frac{5}{8}$ or $\frac{3}{4}$ inch.

Digitized by Google

The centering piece *P* is a casting drilled to slide freely on the studs, and having a coned or bell-shaped mouth, with a small hole in the center through which the center drill comes into the piece to be centered. By keeping the hole as small as possible, small size rods can be centered in it.

With a cup center in the tailstock the bar is put in this center, and forced against the centering piece *P*. This centers it, and then slides back on the studs so the center drill can get to work. The springs return the centering piece on removal of work. Removing the nuts from the studs allows the centering piece to be taken off to change drills, etc.

A GOOD CENTER REAMER

After drilling the hole, there is nothing better than the half-round reamer, made by turning or grinding the end of a steel rod to a 60-degree angle, and filing or milling one-half of it flat, as shown in Fig. 19. This is easy to make and does a good job. It is sharpened by grinding on the flat side.

The drill, reamer, and countersink combination is shown in the end of a bar in Fig. 20. The object of the countersink is to enable you to face the end without interfering with the center. This combination is almost universally used.

Five examples of how not to center a piece of work are shown in Figs. 21 to 25. Their defects are easily seen. Fig. 21 is too blunt an angle, 22 is too sharp, 23 has been made with a punch, and in 24 the reamer has gone in so far that the center does not reach the angle at all.

SQUARE UP THE ENDS AND STRAIGHTEN

Fig. 25 is reamed all right, but it should have been squared up before centering, by the cutting-off machine, the saw, by grinding, or even by filing. Facing this down with a side tool would cut away most of the center reaming, as shown by the dotted line.

Another point to avoid is the centering of crooked work. Straighten the work first, and then center it. Fig. 26 is an exaggeration of what happens when the bar is centered first and straightened afterward. The centers have a poor bearing and wear rapidly.

SIZES OF CENTER DRILLS

The size of the center must depend largely upon the judgment. It should be large enough to hold the work firmly under the heaviest cut that will be taken, and yet small enough not to weaken the end

Digitized by Google

or be out of proportion to the finished diameter at the end. If it is tool steel and to be hardened, make the hole and the center as small as can be done with safety, not small enough to cut the center or prevent the piece being held steadily. A large center is more apt to cause cracking in hardening.

In making arbors and work that is to be run frequently or for long periods on the centers, it is best to use as large centers as possible. For regular work, the following sizes are recommended by J. T. Slocomb:

TABLE 1.—SIZES OF LATHE CENTERS TO WORK TO BE TURNED

Diameter of Work.	Diameter of Center Drill	Diameter of Countersink	Speed of Drill and Countersink
$\frac{3}{16}$	$\frac{3}{64}$	$\frac{3}{32}$	2000
$\frac{1}{4}$	$\frac{1}{16}$	$\frac{7}{64}$	1700
$\frac{5}{16}$ to $\frac{1}{2}$	$\frac{1}{16}$	$\frac{1}{8}$	1600
$\frac{9}{16}$ to $\frac{3}{4}$	$\frac{5}{64}$	$\frac{9}{64}$	1500
$\frac{13}{16}$ to 1	$\frac{5}{64}$	$\frac{3}{16}$	1300
$1\frac{1}{16}$ to $1\frac{1}{4}$	$\frac{3}{32}$	$\frac{7}{32}$	1000
$1\frac{5}{16}$ to $1\frac{1}{2}$	$\frac{3}{32}$	$\frac{1}{4}$	900
$1\frac{9}{16}$ to $1\frac{3}{4}$	$\frac{3}{32}$ to $\frac{1}{8}$	$\frac{9}{32}$	850
$1\frac{13}{16}$ to 2	$\frac{1}{8}$	$\frac{5}{16}$	800
$2\frac{1}{16}$ to $2\frac{1}{2}$	$\frac{5}{32}$	$\frac{3}{8}$	600
$2\frac{5}{8}$ to 3	$\frac{3}{16}$	$\frac{7}{16}$	500

In drilling the centers on a lot of similar pieces, it pays to be careful that the pieces are all as near the same exact length as possible and are centered to the same depth. This makes it much easier to turn the work to exact distances between shoulders. A little care will save time and work in future operations.

THE LATHE CENTERS

The days of plain round centers, with no means of removing from the spindle, have passed in most shops.

Most centers now have squares or flats, so that a wrench can be used, and, with the hollow spindle, the rod for driving out the live center. The dead center is usually forced out by the screw in the tailstock, when it is run in all the way. But the square enables it to be taken out in any position.

Some prefer a center made with a threaded nose and a nut, as shown in Fig. 27. This should have a fairly fine thread, say 18 to the

Digitized by Google

inch, to give a strong pull with little effort, as all that is needed is to start the center.

When a rod is used to drive the center out, the end of the center should be turned down and rounded so as to avoid its enlargement from the riveting action.

HAVE TWO SETS OF CENTERS

There should be at least two sets of centers, one for heavy work and one that is kept for fine turning. All centers are now hardened. Particular attention should be paid to keeping the *live* center true, this being more important than the dead center. For if the dead center

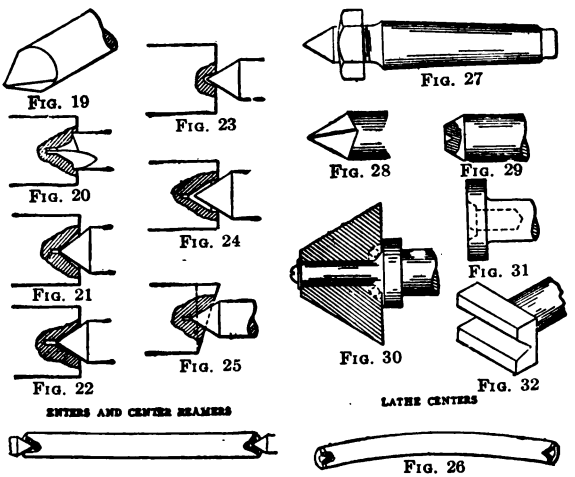

Figs. 19–32.—A variety of center holes and centers.

is an eighth of an inch out of line, it simply means that the work is held an eighth of an inch too high or too low, or the same amount to one side or the other, but it does not affect the roundness of the piece being turned, providing the live center is in line with it. If, however, the live center is an eighth of an inch out of true, the center of the work is carried around in a circle one-quarter inch in diameter, and this end of the work will be turned eccentric to that extent, gradually getting round as it approaches the dead center.

This is the reason that grinding machines have the work run on dead centers at both ends, as it avoids all eccentricity due to the live center being out of true.

It is best to keep the live-center spindles for use in that place only, and to be careful that both the hole and the center are wiped clean before putting them in place.

Digitized by Google

In most cases it is an advantage to mark the centers and the spindle so they can be put back the same way, although modern lathes are generally accurate in this respect. Unless the screw and nut center is wanted, a very handy way is to make them out of a piece of octagon steel and leave the flats of the octagon to be handled by the wrench. This wastes less stock in turning up, and takes less time than using a square bar, as is often done.

CENTERS FOR SPECIAL WORK

A cutting center for centering work, as described elsewhere, is simply a center ground with a square point to act as a blunt reamer, Fig. 28. Needless to say, it cannot be too pointed or too sharp, as it dulls too quickly.

This kind of a center is also used to drive small work by fitting into a square center, made in one end. This will not stand a very heavy cut, but is useful in some cases, such as turning valve disks having a stem on one end, similar to a gas-engine valve.

Some prefer a three-sided center for cutting, especially on brass or softer metals, on account of the sharper cutting angles it presents.

Some kinds of work, such as small taps, cannot have a center drilled in them, and instead have a point which fits into a female center, as shown in Fig. 29. This requires the work to be centered by pointing, before coming to the machine.

A PIPE CENTER

For holding such work as cast or wrought-iron pipe, a large center is necessary, unless a cap is placed over the end and a center put in that. So a large cone center is made, with the angle varying according to the ideas of man in charge. For small pipe the regular 60 degrees is all right, but on larger work a 90-degree angle is better.

Instead of having these solid and letting the pipe turn on the center itself, it is customary to have the cone run loosely on the body of the spindle. The bearing is usually against a cone, so as to center it, but sometimes a ball-bearing is used, as indicated in Fig. 30 by the dotted lines. The pipe bears on the cone, which turns with it, and saves wearing a groove where the thin edge of the pipe comes.

CENTERS FOR DRILLING

When the lathe is used for drilling, as is usually the case in a small shop, some drilling center should be provided to hold the work against. A plain drilling pad is shown in Fig. 31 which is simply a flat-faced center, turned square with the spindle and having a recess or hole for

Digitized by Google

the drill to pass into. It is not a good plan to drill into the spindle itself on account of getting chips into it, and for this reason it is better not to have the hole in the drilling center go clear through. The outside diameter can be made to suit the work that is likely to come up.

Fig. 32 shows a center that is extremely handy in drilling holes crosswise in round bars. The V should be carefully laid out and cut, so as to be exactly across the center line; otherwise it will not hold the work so as to drill in the center. This is especially useful to the tool-maker in the small shop who has to mortise boring bars by drilling, chipping, and filing.

Digitized by Google

CHAPTER III

DRIVING AND TURNING THE WORK

Centered work is usually driven by a dog of some kind, the bent-tail dog being the most common. The only precaution is to be sure that the tail does not bind in the slot of the face plate, at either the sides or top or bottom, so as to draw the work off the live center, or prevent its seating clearly and squarely, as in Fig. 33.

If the piece to be turned happens to be a forging or casting, with a

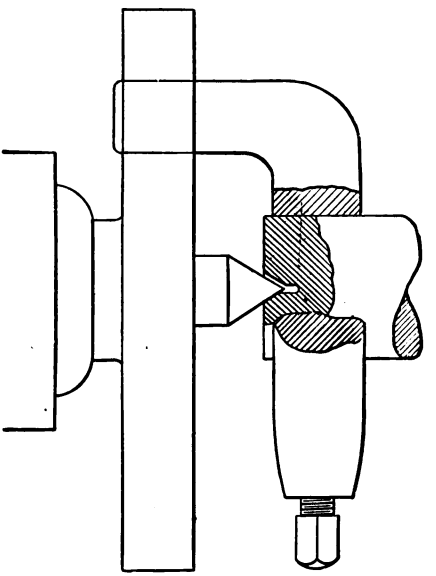

FIG. 33.—Dog holding work off-center.

wing or projection of any kind at the end next the face plate, a stud fastened to the face plate is the best way to drive it, as shown in Fig. 34.

DIFFERENT KINDS OF DOGS

Straight-tailed dogs are preferred by many, but with them it is necessary to use a stud on the face plate. Less trouble is likely to occur from cramping a piece of work when this style dog is used, but the bent-

Digitized by Google

tail is all right if you are careful about putting it in place, and it is more convenient.

Beside the forged or cast-steel dogs in one piece, there are many uses for the two-piece dog, usually made from two pieces of flat stock, bent up by the blacksmith and drilled as shown in Fig. 35. In some cases one side, and occasionally both sides, will have a bent tail for driving, but they are often made straight and driven with one or two studs.

PROTECTING WORK FROM DOGS

On most work roughing cuts can be taken without regard to the screw marking the bar; but if only a little is to be removed it is best

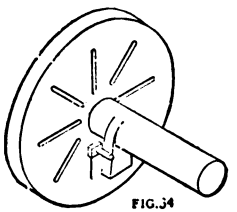
FIG. 34

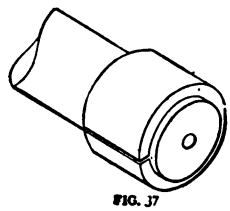
FIG. 37

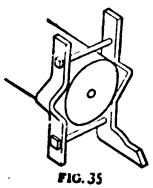
FIG. 35

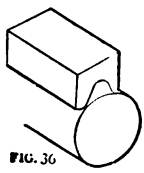
FIG. 36

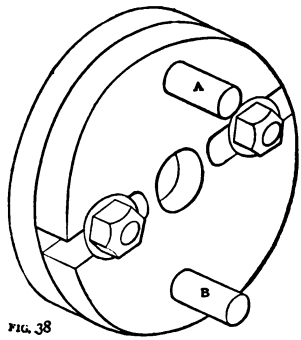

FIG. 38

FIGS. 34–38.—Methods of driving work.

to protect the bar by putting in a piece of iron or brass, as the screw point often makes a deep mark which does not come out with a light cut.

Finished work should always be protected, and a piece of soft iron or hard brass, something like Fig. 36, is always handy to put under the screw. If there are many pieces of the same size to turn it may pay to make a cast-iron collar, like Fig. 37, and make a saw cut in one side of it. Any dog will clamp this on the work in good shape, and drive it without marking the finished part of the bar.

The good workman fastens the dog on tight, sees that both centers

Digitized by Google

are free from dirt and chips, and puts a drop or two of oil in the dead-center hole or on the dead center itself, before he puts the work in the lathe. It should be tight enough to prevent end play, and yet turn freely, a good running fit. Never have the spindle out of the tailstock farther than is necessary.

One of the best methods of insuring equal driving with a double straight-tailed dog is to use what is known as the equalizing face plate as shown in Fig. 38. This consists of an additional plate put on the regular face plate as shown and held to it by the two studs working in the slot in the outside plate. The lathe center comes through in the

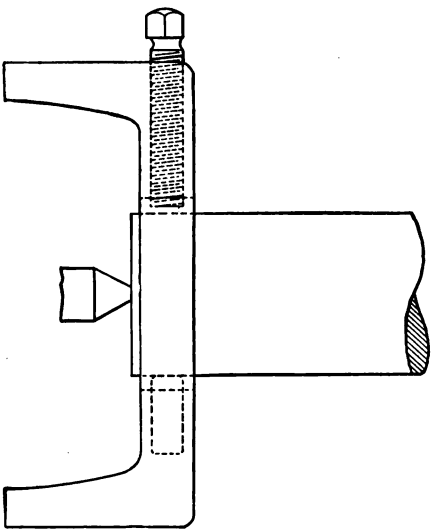

FIG. 39.—Prof. Sweet's double-tailed dog.

usual way, and the outer plate is left loose enough to adjust itself, so that each of the driving studs *A* and *B* will bear with equal pressure on the two ends of the dogs. This insures an even driving pressure and avoids the tendency to crowd the work to one side, which is sometimes found where the bent-tail dog is used, or even the single straight-tail.

For heavy work it is generally conceded that a two-tailed dog is better as it drives from opposite points and avoids the tendency to cramp that was mentioned before. The late Professor John E. Sweet, one of the most practical of men, advocated the style of dog shown at Fig. 39.

Digitized by Google

TOOLS AND TURNING

One of the disputed points in lathe work is the setting of the tool. A glance at Fig. 40 will show what happens with the tool point at the center, on the right, and above the center at the left. For ordinary work of fair diameter, over an inch, it is usually best to set the tool point slightly above the center, but for smaller work it is readily seen that it must be at the center to cut at all, at the small diameter. In taper work it *must* be at the center for good work, and in finishing a thread it is also necessary to set it at the center line if a correct shape of thread is desired.

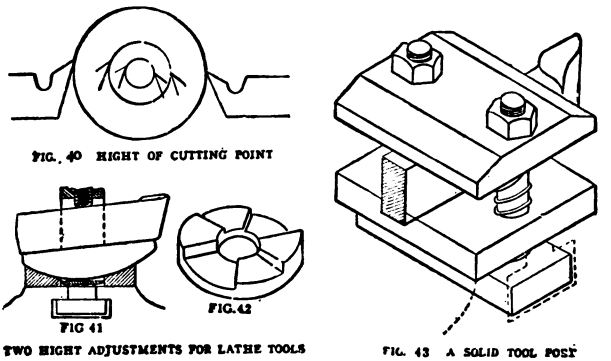

FIG. 40 HIGHT OF CUTTING POINT

FIG 41

FIG. 42

TWO HIGHT ADJUSTMENTS FOR LATHE TOOLS

FIG. 43 A SOLID TOOL POST

FIGS. 40–43.—Setting the tool.

ADJUSTING HEIGHT OF THE TOOL

Most tool-posts have either the curved block, Fig. 41, or the stepped ring, Fig. 42. Some have a height-regulating device with one sleeve screwing into the other, and some lathes still have the elevating screw at the back, which raises or lowers the whole cross-slide. They are very handy in setting a tool, too, because you can fasten the tool first, and then adjust it for height afterward. All these tool-posts are handy, but they are also wabbly under a heavy cut, and the four-bolt tool-holder, similar to a planer, is the most substantial. Fig. 43 shows one adapted to go in a regular tool-block, in place of the other, when there is heavy work to be done. This has two bolts.

AVOID OVERHANG FOR TOOLS

Whichever style tool-post is used, set the tools with the cutting point as close to it as possible. Do not stick it out so as to overhang the support an eighth of an inch farther than is necessary. Every possible chance for spring should be avoided, so far as it can be done. The reason

Digitized by Google

the new special lathes can remove so much stock is because they support the work and the tool so as to avoid the springing of either.

TURNING THE WORK

Unless the bar has been faced a little with the countersink, as in Fig. 44, the facing or side tool is the first to be used, so as to get the end square and have an equal bearing on the center. The usual side tool is shown in Fig. 45. Even with the countersinking, it is a good plan to face down to meet it, although if the work has come from a cutting-off machine or a cold saw this is probably unnecessary.

The tools to use in turning this bar, the feeds, the depth of cut and the speed, all depend on the hardness of the material to be turned, the kind of tools used, the stiffness of the lathe, and the driving power of its belt. Calling the work machinery steel and the tools of a good grade of carbon steel, tempered in the usual manner, it is a good plan to start work with a tool something like Fig. 46. The lower view shows the cutting action.

THE FIRST CUT

Always take the first cut deep enough to get under the scale if it is a possible thing, as this saves the tool. For roughing the work, most mechanics prefer a deep cut and a fairly fine feed and reverse this in finishing, though in the old diamond-point days this would have been all wrong. Good finishing can be done with a broad-nose tool, with enough rake to cut freely, a rounding corner on the leading point, and a fairly coarse feed.

Fig. 47 shows this at work. The depth of the finishing cut depends on a number of conditions, but if necessary quite a cut can be taken. The only object of the groove back of the cutting point is to allow grinding easily and still retain the top rake. The clearance in front should be slight. If a nice finish is wanted there is nothing better than a stream of water on the work, either plain or mixed with soda to prevent rusting.

ONE OF THE HARDEST JOBS

One of the hardest jobs on a lathe is to turn a bar exactly the same diameter from end to end. By carefully calipering the bar after the first cut, at points as far apart as possible, it is easy to see how nearly right it is, and to move the tailstock to correct any slight taper that may be found.

Digitized by Google

TURNING WORK WITH SHOULDERS OR COLLARS

Most work has one or more shoulders, and several varying diameters, such as the bar shown in Fig. 48. A fair allowance for finish on such work is ⅛ inch in length and same in diameter to be reduced, for the largest part of the bar. As the lengths as well as the diameters are important, one good plan is to lay off these shoulders as soon as the roughing cut has been taken. This can be done by drawing a chalk mark, the

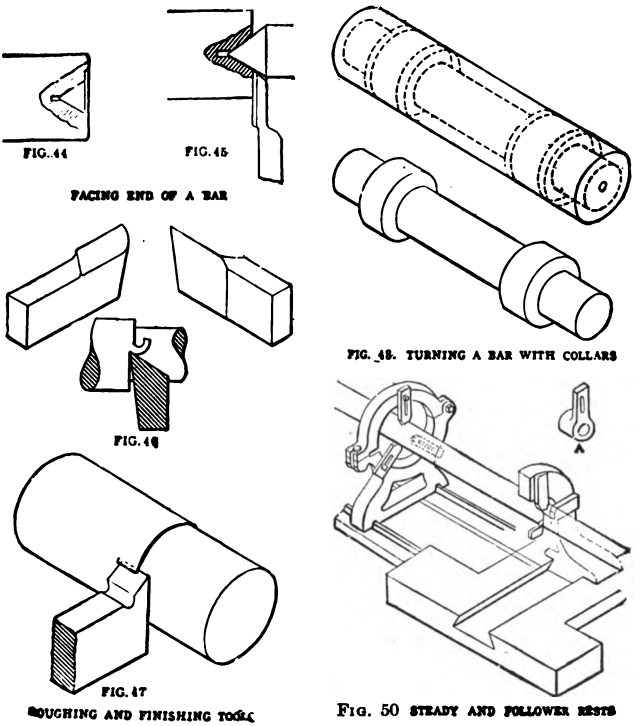

FIGS. 44–48 and 50.—Facing and turning.

length of the bar, laying out the distances on this mark and scoring a line at each point with a sharp-pointed tool held in the tool-post.

Shall the piece be faced to length, before cutting any shoulders, shall the facing be left till last, or shall one end be faced and the other left to be finished afterward? If both ends are faced the first thing, there is absolutely no leeway for a slight error in making a shoulder. But if by accident the tool cuts a little too deep at the first shoulder, there is still a chance for saving the piece by facing that end down to meet it. Of course such things should not be done, but they sometimes happen, and if it is possible to leave a loophole it is well to do so.

Digitized by Google

FACING THE ENDS LAST

Adopting the plan of facing the ends last, lay off the distances from the center, or, if from the ends, allow one-half the extra length of bar for facing. With these marks there is no excuse for not getting the job right, taking care not to undercut the shoulders so that, when you face them up square with a side tool, the collars will be too thin. The facing can best be done by feeding the side tool, or whatever you use, into or out from the center, so as to get it square, rather than to depend on setting the tool square. This is also a good plan in facing the ends and in almost all facing work.

ANOTHER METHOD

Another way of doing such a job is to use a cutting-off tool and cut grooves each side of the marks to about the depth needed to bring them down to the required diameter (see dotted lines, Fig. 48). Enough should be left for facing and finishing, as the cutting-off tool very seldom leaves the surface smooth enough for a finish.

The accuracy of the work can be measured by a gage of sheet metal, if one is in the place, or by a rule, or with calipers. The odd-legged caliper is especially useful in this work, for all except the thickness of the collars. The regular calipers are best for this.

SPRINGING OF WORK

On work that is stiff enough to stand a good cut there is little difficulty in making good time. The limit to the material removed is the ability of the tool to keep a fair cutting edge, which means that it must not get hot enough to start the temper, and the ability of the centers to hold the work and the belt to drive the lathe. The belt-driven feed for the carriage is a very good safety valve for the rate of feed. It will slip or come off entirely if the feed gets too much for it. If this happens after the work has been turned a short distance it probably indicates that the tool is dull, and can be remedied by reducing the feed or the depth of cut. With a geared feed the cutting edge of the tool must be looked after more closely, as the only safety valve is a lot of broken gear teeth. High speed steel tools stand high speeds.

TURNING SLENDER WORK

With long, slender work comes the necessity for care and judgment. Cuts must be lighter and the cutting edge keener, so as to spring the work as little as possible. A dull tool oftens springs the work to the

Digitized by Google

point where it climbs over the tool point, bends out of shape or breaks, and sometimes snaps the points off the lathe centers. Care on slender work will avoid this. Keeping the cutting point a little above the center will help in preventing this kind of an accident, but steadying devices should be supplied wherever possible.

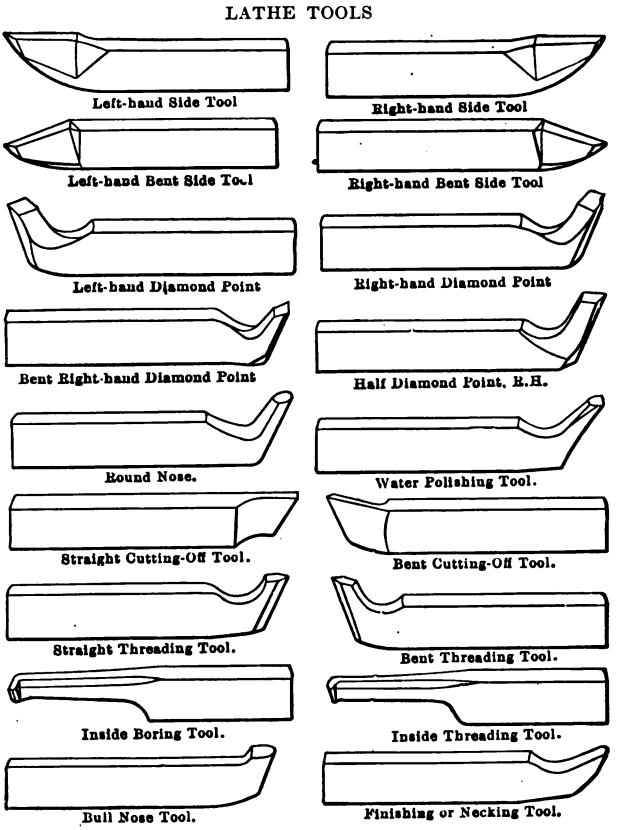

FIG. 49.—Standard shapes of tools.

SHAPES OF TOOLS

Although there are now thousands of tool-holders in use with inserted tools, the solid tools still have a place, and in Fig. 49 we show what may perhaps may be called the standard shapes. The diamond point has given way to the side cutting tool, as in Fig. 46, for roughing, but is still used in many places.

Digitized by Google

CUTTING SPEED

Cutting speeds and feeds have changed greatly in the last few years, and this has been made possible, both by the introduction of high-speed steel and the lathes which have been designed to stand as heavy a cut as the tool itself. Whichever steel is being used it is a safe plan to run the lathe as fast as the tool will stand up without too frequent grindings, and then make the cut and feed all the lathe can stand.

There is a lack of uniformity in shop practice in this respect, probably due to the difference in material and conditions generally. Castings, both iron and steel, affect tools very badly at times, due to sand in the scale and impurities in the iron itself, the highest cutting speeds being obtainable on low-carbon steel.

Cutting speed for cast iron seems to vary from 30 to 60 feet per minute, one shop using a speed of 44 feet per minute, with a cut of $\frac{1}{4}$ inch and a feed $\frac{1}{6}$ of an inch. With a tool $\frac{3}{4} \times 1\frac{1}{2}$ inches this was maintained for one hour without re-grinding and means the removal of 330 pounds of cast iron per hour. This is for high-speed steel.

On low carbon or machine steel this same shop uses a roughing speed of from 80 to 130 feet per minute and from 150 to 300 feet per minute for finishing cuts. Their records show from 4 to 15 pounds of metal removed per minute or from 240 to 900 pounds per hour.

Other shops rarely get above 100 feet per minute, cutting speed, although in one case 140 feet is used in finishing tool steel, but with a very light cut. One good-sized shop uses from 80 to 125 feet per minute for lathe work, with cuts ranging from $\frac{1}{16}$ to $\frac{1}{4}$ inch and feeds from $\frac{1}{64}$ to $\frac{3}{32}$ inch per revolution of the work.

In thread cutting as well as plain turning, the cutting speed has been very materially increased, until we find 90 feet a minute being used on long screws.

These are simple guides that give us something to work by, although the conditions may make it impossible to secure the same results in all cases.

Digitized by Google

CHAPTER IV

STEADY AND FOLLOWER RESTS AND FACE PLATE WORK

For slender work that is liable to spring, the old diamond-point tool still holds its own. Most work of this kind can be helped by the use of a steady rest, when the part to be turned is at one end of the piece. The steady rest comes with every lathe, and has something the appearance shown at the left of Fig. 50. Some classes of work require this kind of a rest, such as long crank-shafts with several cranks, and other pieces.

Occasionally it is necessary to turn a short place in the center or some other point of a long bar as best we can, so as to put the steady rest on a fairly round part of the work.

BORING END OF BAR

Another application is shown in skeleton in Fig. 51. Here is a bar which has been turned on centers, and which is to have a hole bored in the end so as to be true with the outside of the bar. A dog or clamp similar to *A* is put on, and the piece held between the centers, as before. The steady rest is adjusted at the outer end, as shown at *B*, but before the dead center can be removed so as to drill and bore this, we must fasten it to the face plate. Use a stud similar to *C*, for driving and holding the dog *A*. This is put through the face plate from the back and clamped to it by the first nut. Then the dog is fastened between the third and fourth nuts, and in this way can be very nicely adjusted, so as to pull the work evenly toward the face plate, and drive it at the same time. Washers should be used under each nut. Then the dead center can be removed, and the hole drilled, bored and threaded, as desired.

FOLLOWER RESTS

Some work is so slender, or the cut must be so deep in proportion to its diameter, that it is necessary to support it right over the point of the cutting tool. This means that it must be fastened to the carriage and move with it, so as to follow the cutting point, which gives it the name of follower rest. All lathes need them if small work is to be done,

Digitized by Google

but they are not always provided. The idea is made plain at the right in Fig. 50.

The value of follower rests can easily be seen by examining any of the new lathes which take heavy cuts. These all have heavy follow rests and in some cases rollers are used in them at the top and back of the bar.

BUSHINGS IN FOLLOWER RESTS

For some classes of work it is advisable to use a cast-iron bushing to follow or lead the tool, as *A*, Fig. 50. This can usually be used for

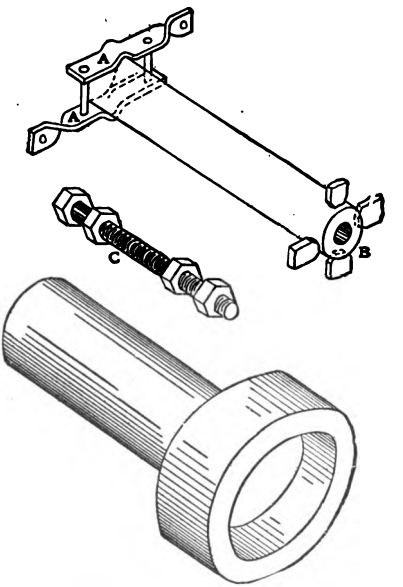

FIG. 51.—Holding work to face-plate.

square or flat top threading, as to have it fit after each cut would require reducing the bushing each time, and not be practical. And unless a follower or steady rest really supports the work, it is of little use. The bushings can be bolted to the follower rest in place of one of the regular arms.

FACE-PLATE WORK

Face-plate work requires more care and thought on the part of the lathe men than most other kinds, and is mostly confined to job or repair work. Where a piece that would ordinarily be done on the face plate is manufactured in fair-sized lots, a fixture is made and it usually goes to a boring-mill instead. But the face plate is still necessary and its use

Digitized by Google

is common on a large line of work. The face plate might be called a chuck with removable jaws, for the various clamps used take the place of chuck-jaws.

Take a simple job, such as is shown on the face plate in Fig. 52. The problem is to face both sides of this casting square with each other, and then to bore the two holes in their right location, the correct distance apart. The plain side will be done first in this case, as then we can sift the work on the face plate to bore the smaller holes.

TRUING THE FACE PLATE

If there is any doubt as to the face plate running true, test it with a tool point or a marking gage of any kind. As it will be necessary to use a gage from time to time, it is just as well to use it for this and avoid the danger of marking up the face plate if it is true already. The plate does not need to be particularly smooth; in fact, it holds work

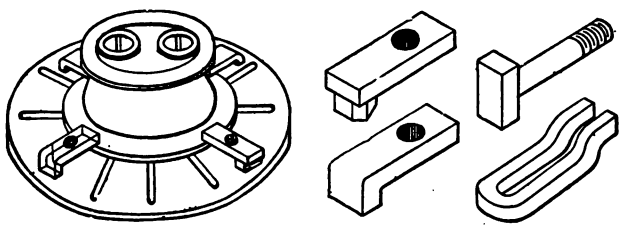

FIGS. 52 and 53.—Face-plate work.

better if it is not, but it should be true. Lathe indicators help in this work, as will be seen later.

CLAMPING THE WORK

Bent-tail clamps as shown in Fig. 53 are handiest to use, but straight pieces can be used and the outer end clamped down on to a nut or other piece of metal, as shown. It is handy to have the T-head bolts, as they can be put through the face plate, from the front, and a quarter turn gives them a grip. The work can sometimes be clamped best by putting the face plate on the bench and locating it as nearly as possible, giving the final adjustments after it is put on the lathe. This is to be decided by the man himself and the easiest way adopted. With a portable crane or other hoisting device it can be handled from the bench to the lathe very easily.

The first thing is to lay two or more parallel strips on the plate, so as to raise the work clear of the projecting rings, or "spigots," as they

Digitized by Google

are sometimes called. Then arrange the clamps so as to put the strain on the flange as nearly over the strips as possible, and screw them down tight enough to prevent slipping when put in the lathe. When the piece is swinging in the lathe, true it up by turning the lathe slowly and shifting on the face plate, generally by tapping with a soft hammer, until it runs true. This can be tested very closely with the eye after a little training, but a lathe tool or the marking gage run up near it will show exactly how it is running. When true, clamp solidly to the face plate and face it off with a round pointed tool, taking a cut that will get under the scale. Some prefer facing out from the center, others toward the center. The latter lets you see what you are doing a little better.

SAVING A POOR CASTING

It sometimes happens that the two faces of a casting like this will not be parallel, and that if all of the inequality is faced from one side the flange will be too thin. But if this is divided up between the two, the casting can be saved. In such a case block up a little under the low side of the casting and in this way divide up the error.

Reversing the casting on the face plate, clamp the side already faced and turned so it will run true. This will be helped greatly by having circles scored on the face plate at regular intervals, such as ½ inch apart, similar to many chuck faces. It can be tested by the gage as before. Turning the outside of the smaller flange, shown uppermost on the face plate in Fig. 52, is an easy matter, and then comes the laying out of the two openings shown.

LAYING OUT HOLES

Drive in, lightly, pieces of wood across the holes and lay off the right distance between them. This gives the centers of the smaller holes. Lay these out with a pair of dividers so as to know how to set the work for turning and boring these. Loosen the clamps so that the work can be moved; turn the face plate so that one opening will be over the other and the weight will help drop the casting to the point where the dead center will come in line with the center mark on the wooden block. Then clamp the work. To test it still further, put the gage in the tool post and see that it follows the circle marked by the dividers. If it does, the work is ready to face, bore and turn. Then shift to the other hole and machine that.

Digitized by Google

HANDLING SPECIAL JOBS

It sometimes happens that a job comes along which cannot be handled by any ordinary methods or by the tools regularly used. Such a piece of work is shown in outline in Fig. 55. It was a lot of large cast-iron caps, 60 inches in diameter, which had to have a dovetail slot cut in them at *a*, in which rubber packing was to be forced to make a tight joint over a pipe. The largest face plate wasn't as big as this, but a bright machinist went to the blacksmith shop and had four pieces of $1\frac{1}{2} \times 4$-inch iron bent into angles, as shown, drilled holes in them for wood screws at the short end and for bolts at the long end, and screwed on hardwood blocks *B B B B* (Fig. 54). Then he bored these a little taper-

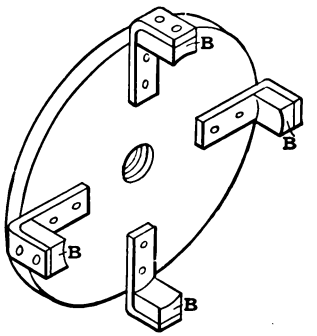

FIG. 54

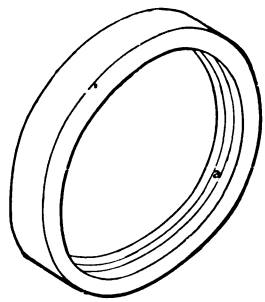

FIG. 55

FIGS. 54–55.—Holding large work.

ing, to the size of the outside of the castings, and drove the rims in with a soft hammer till they were square. This held them true without any caution except to drive them in until the face ran true, and held them firmly enough to take any cut that was necessary. Wooden blocks can often be used in similar cases and do good work, as they have considerable elasticity and grip the work very tightly.

ANGLE PLATES

While many other examples of face-plate work might be given, these show the general plan to be followed, and any work of a similar character can be handled as readily. Angle plates add to the range of work that can be done on the face plate, as indicated by Figs. 56 and 57, and there is no end to the variety of angle blocks and special blocking-up devices that will be found in shops handling a large variety of jobbing work. The machinist who can tackle the work as it comes in, and handle

Digitized by Google

it with the blocks, straps, and other "fixings" he finds on hand, is the one that is in demand. Angle plates are also made with a plate that can be shifted to any angle to the face plate and are very handy, although not as rigid as the solid plates.

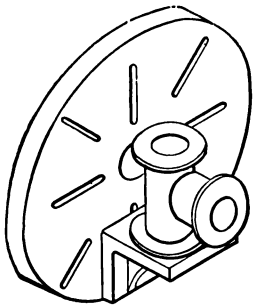

FIG. 56

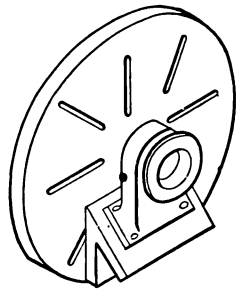

FIG. 57

FIGS. 56–57.—Use of angle plates.

BRIDLE FOR FACE-PLATE WORK

Any one who has noticed the amount of time a lathe hand consumes in the different machine shops looking for a bridle and two bolts of suitable length to bridle a shaft for any work on the head center will agree that more time is often lost in looking up these things than the work costs. Fig. 58 shows how to bridle work on the center without

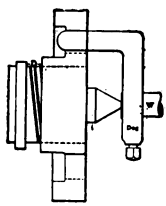

FIG. 58

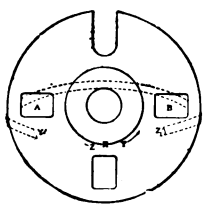

FIG. 59

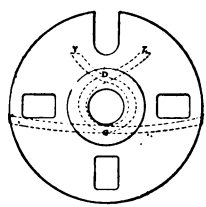

FIG. 60

FIGS. 58–60.—Using a belt lace bridle.

loss of time and no long hunt for bolts, bridle or packing washers. And when at times you forget and place your hand on the steady rest, there is no bolt to come around and take the bark off of your finger as is usual in work of a short length.

Take a piece of strong belt lacing ½ inch wide, about 38 inches long; place one end in right and one end in left hand as in Fig. 59. Place the end *Y* that you have in your left hand through bolt slot in drive plate *A*. Place the other end *Z* in your right hand in slot *B* with the center of

Digitized by Google

lacing on top of work as shown by dotted lines. Now let ends *Y* and *Z* follows arrows *Z* and *Y* and cross beneath the work on center at *X*.

Fig. 60 shows lacing crossed at *X* and *C* and the dotted lines also show lacing crossed at *D*. When you have accomplished this, *i.e.*, placing the lacing according to dotted lines, tie a common knot at *D*. You do not have to pull so hard that it is impossible to reopen the knot; just give it a good pull.

The most important point is the necessity of allowing for the draw. Before starting to lace unscrew drive plate a few turns, until the face

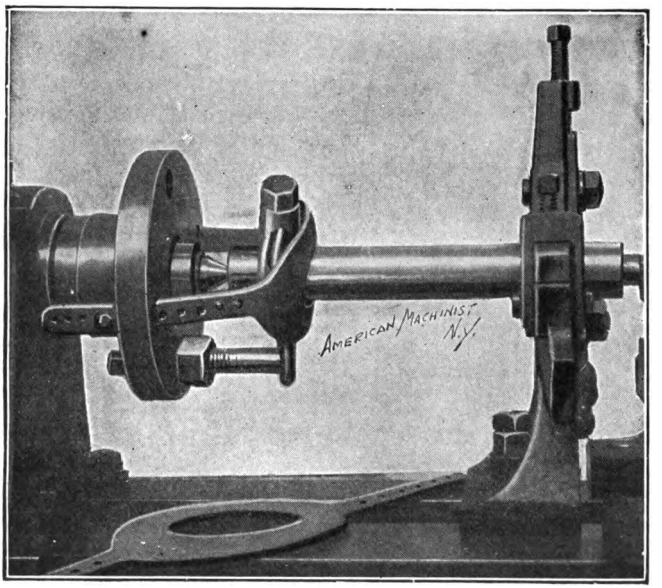

FIG. 61.—A handy bridle for lathe work.

plate is about ¾ of an inch from spindle collar. Then apply lacing as directed and draw drive plate up on spindle nose and you are ready for work, as this holds it tight.

When the work is done, loosen the face late again, which eases up on the knot so that it can be easily untied.

Another plan is shown in Fig. 61, which is more convenient many times than the lacing, although you can sometimes find a substitute if a lacing is not handy. This can be made without difficulty and easily kept in a tool chest until wanted.

Digitized by Google

CHAPTER V

CHUCKS, CHUCKING AND BORING TOOLS

While the selection of chucks best adapted to the work must depend on conditions in each shop, it is safe to say that for ordinary machine work, especially in a jobbing shop, the independent jawed chuck is best in almost every case. Even with round work, the independent chuck is better if it must be gripped hard for severe work, as the three- or four-jawed universal chuck, with its rack and pinions or other devices, is weak, as compared with the independent chuck. This does not refer to the two-jawed chuck, where the screw runs through from one jaw to the other; these are very strong, but are more useful on turret and chucking lathes than on the engine lathe for general work.

For holding finished work, where the work to be done is light, and the exact truth is not essential, such as polishing with emery cloth, the universal chuck is very handy, but it cannot be depended on for accurate work, as any one can readily prove for himself. And for job work, the independent chuck is indispensable, with odds in favor of the one with four jaws.

By having circles a half inch apart on the face, it is easy to set the jaws very near the center at the first trial, and the work can be gripped as tightly as necessary for any job, as there are no gear teeth to give way.

HANDY JAWS FOR MOST WORK

Special jaws can be had or false jaws made to go over or on the regulars, but for a large variety of work the jaws shown in Fig. 62 are very useful. By setting these with the "steps" out, the long bearing of the jaw is available for the smaller work, and the steps for gripping the inside of larger work.

Always grip work as near the face of the chuck as possible, simply because it gets back nearer to the spindle. This is especially necessary when the work is not supported at the outer end by the dead center, and is all overhang. Avoid overhang in everything as far as possible, which means keep the tool point near the holder, the dead center in as close as you can, and the work near the end of the spindle.

Digitized by Google

Using these steps, or even the outside of the end of the jaws, allows chucking pieces considerably larger than the chuck itself. Reversing one or two jaws as in Fig. 63 often gives just the sort of a grip you need for odd-shaped pieces. The faces of the jaws also give a good guide for chucking rings and similar work square on the face, and many different applications will come up from time to time.

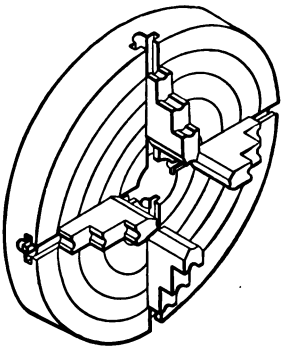

FIG. 62

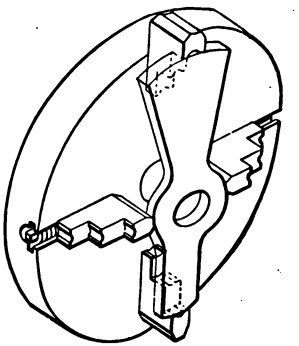

FIG. 63

FIGS. 62–63.—Chucking work.

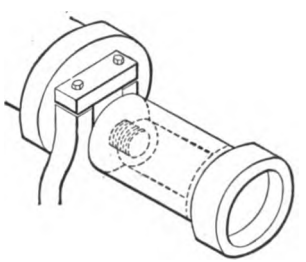

FIG. 64

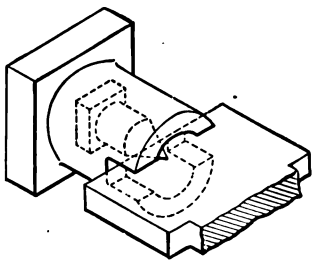

FIG. 65

FIGS. 64–65.—Special chucks.

SPECIAL CHUCKS

The regular chucks do not end the question, however, as every shop has a variety of special chucks for various uses. These may be simply cast-iron cylinders, screwed on the lathe spindle to hold a standard size bar for finishing, as Fig. 64; or expanding or contracting chucks for a similar purpose, but more accurate work, as Fig. 66; or still another little device for driving a flat cutter or reamer while it is being turned or ground, as Fig. 65. Other variations will be found in many shops, or will come into use as necessity arises.

Digitized by Google

In Fig. 66 the work is held by springing the jaws through the wedging action of the coned surfaces. The internal chuck at the left is largely used for holding small rods, and the expanding chuck (or mandrel) at the right, for turning work after it has been bored. The jaws are split just the same, but are expanded by forcing the cone in. Sometimes this expanding cone is handled through the lathe spindle and operated while the lathe is in motion. Many devices are also made so as to operate the internal chuck without stopping the lathe, but these are not used on engine lathes in many instances.

MAKING A COLLET FOR A LATHE

It quite frequently happens in the average toolroom or machine shop that there is a scarcity of collet lathes to meet the requirements. This is perhaps more often the case in the toolroom. In the building of jigs, fixtures, dies, gages, etc., the collet lathe is certainly an indispensable tool, and in the shop where there happens to be only one, it is a case

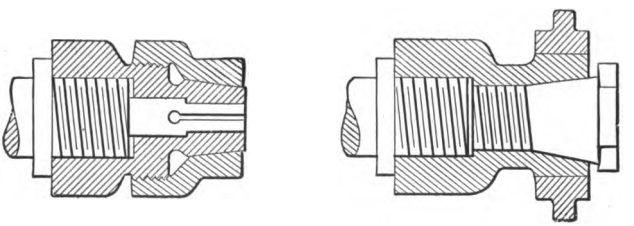

FIG. 66.—Split chucks.

of wait, most of the time. Now any ordinary hollow-spindle lathe can be quickly and cheaply converted into a first-class collet lathe by making a fixture similar to the one shown in Fig. 67.

A represents the lathe spindle, which in this case carried a center about 1⅛ inches diameter at the small end. To this center is fitted the hardened and ground taper sleeve *E*. This sleeve was ground to fit the collets used on other lathes. As this rig admits of much larger size collets than the ordinary draw-in collet lathe some extra sizes can be made. The machinery steel sleeve *B* was next fitted to the spindle, and by means of a spanner wrench screwed up tight to the shoulder. This sleeve has a fine thread on front end to which a cap *C* was fitted having a taper to match the front end of the collet. The working of this rig must be apparent at sight. Both tapers of the collet being used, and as the cap *C* is made with a fine thread (20 per inch), a very powerful grip is obtained. A spanner wrench is fitted to the cap *C* also. Several have used this chuck quite extensively in their shops, where it is usually preferred to the ordinary draw-in collet. It is nearly as rapid in manip-

Digitized by Google

ulation, is very stiff and rigid, and for holding power it is much better than the collet lathe.

Where the use of long bars is not required, an ordinary small center lathe with no hollow spindle can be used by extending the sleeve *B* and fitting it to a short collet as shown in Fig. 68. The sleeves *B* and *C* should be made of machinery steel, case-hardened; a pin *F* forms a key to prevent the collet *D* from turning.

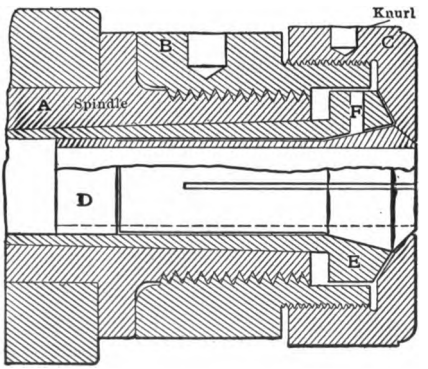

FIG. 67

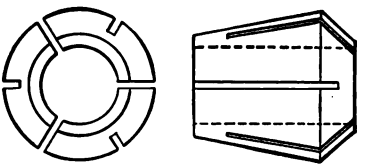

FIG. 68

FIGS. 67–68.—How a collet is made.

INTERCHANGING LATHE CHUCKS

In the jobbing or other small shop it is quite customary to use the same chucks and face plates on different lathes, and men often say things because the threads on the ends of the spindles are not all the same. When they are different we find adapters or pieces threaded to fit the nose of one spindle and the chuck that goes on another.

But there is another feature about interchanging chucks that is apt to be overlooked in shops where the finest class of work is not done. It is practically impossible to get a chuck to run true to any lathe but its own, and it isn't easy to make it run twice exactly alike even on its own spindle. We do not always realize that a very small piece of dirt, either in the thread or on the shoulder, will throw a chuck out of true more than we might imagine, and this is equally true of face plates.

Digitized by Google

If you doubt this, just try putting on a face plate and note that it usually goes on rather snugly. Now clean the thread out and note the difference. You can be sure that it does not go on in exactly the same position in both cases and the condition is changed every time it goes on.

KEEPING FACE PLATES TRUE

The noses of most lathe spindles are not designed so as to make it easy to maintain the truth of face plates. The small bench or precision lathes are best in this respect as they draw the face plates or chuck onto a taper which comes nearer holding them true than the square shoulder. The long thread is entirely unnecessary as all it does is to keep the face plate or chuck from coming off, but does not hold it true; this must be done by a straight or taper portion.

When a new lathe comes in the shop the face plate should be trued upon the lathe itself before any nice work is attempted on it. In some shops the face plate is trued every time an extra nice job comes along and is not taken off till it is finished. This is a good plan to follow and also to avoid taking it off for another job before the work is done. This is sometimes difficult in a job shop, but the work will very seldom run exactly true when it is put back into the lathe again.

If the face plate is carefully tested it will be found that in some cases the cross-slide will not turn exactly square with the spindle, but will be trifle concave, and this is usually done purposely. A concave face plate is better than one convex because it enables work to be clamped to it more firmly.

USING SCREW CHUCKS

Screw chucks that go on the lathe spindle and are threaded to receive work are a great source of annoyance from this cause. It seems as though they ought to run true, but they never do unless far more than ordinary care is taken. Every joint gives a chance for dirt to get in and that means error in the running of the work.

On very nice work where screw chucks are used, they make a new chuck for every lot that is to be made. Turn it up in the lathe, thread it in place and never take it out till the whole lot is finished. Then the chuck is thrown in the scrap heap and a new one made for the next lot. This is the result of long experience and is much cheaper than any attempt to save money by using the old chuck over again. There is a large variety of work, however, where this precaution may not be necessary, where the other way be plenty good enough, and it is up to the really practical machinist to decide when to use the ordinary and when the most refined methods.

Digitized by Google

BORING TOOLS

Tools for boring are a very different proposition from those for turning. Turning tools can be supported very close to the cutting edge, but this is impossible in boring tools unless the hole is very short. The spring of the boring tool should be reduced as much as possible.

Some of the old forged boring tools were weak in this respect, as they sacrificed strength in the stock to get a long hook on the cutting point. This is not necessary with the forged tool, but was done to allow for many grindings without redressing the tool.

BORING TOOL HOLDERS

The newer tools, such as shown in Figs. 69 and 70, are better in this respect, as the stock of the tool can be as large as will go in the hole,

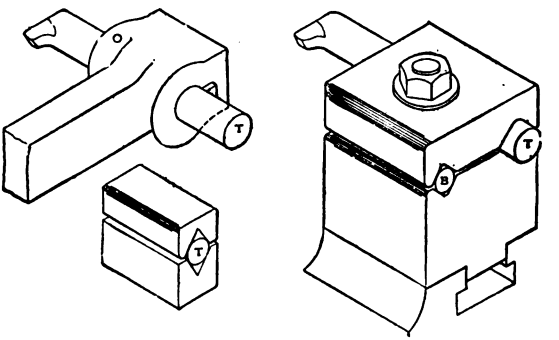

FIGS. 69–70.—Boring tools.

after allowing for the length of cutting lip. This gives the cutting edge a good support, and allows better work to be done.

The holders in Fig. 69 are both held in the tool-post; neither of them is new but both have many uses. The V-blocks are simple, but the other has the advantage of being able to replace the tool in the same place, as the holder remains fixed in the tool-post.

Fig. 70 is a more substantial block that goes right on the tool-block, and is more solid than the others. By having a large and small *V*, it is easy to hold different-sized boring tools very firmly. In each case the end of the tool is marked *T*, and *B* is simply a piece of steel the size of the small tools to clamp the top piece down against.

Digitized by Google

GRINDING BORING TOOLS

The tendency of tools ground as shown in *A*, Fig. 71, is to be crowded away from the cut, as shown by the arrow, and as it dulls this is increased. This means that the hole will be smaller at the back than at the front, and that light cuts must be taken to get it straightened out.

With the cutting edge square, however, the spring is all down and

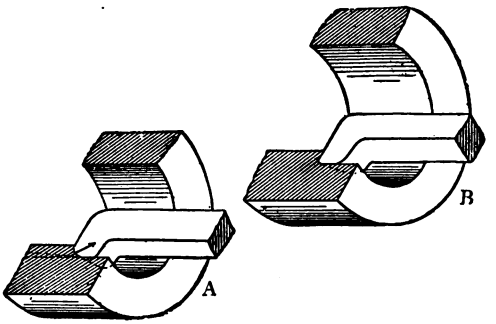

FIG. 71.—Tools in the cut.

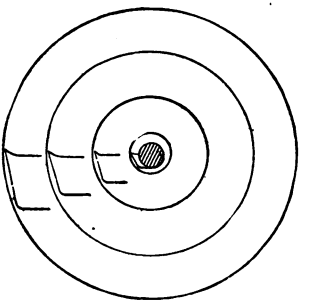

FIG. 72.—Setting boring tools.

not away from the bore, but it is necessary to modify this a little in heavy boring cuts by rounding the corner a little.

The clearance of boring tools must be watched carefully, especially in small holes, as can be seen in Fig. 72, which shows different diameters and the clearances for each.

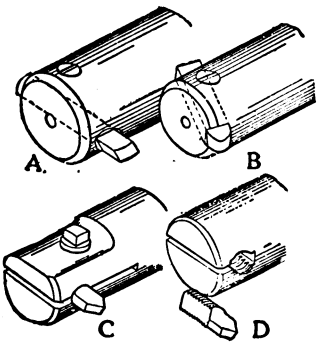

FIG. 73.—Inserted cutter boring bars.

BORING BARS WITH INSERTED CUTTERS

On work with a fair diameter it is often possible to use inserted cutters to advantage, as shown in Fig. 73. These have the advantage of costing little to keep up as the cutters can be made of commercial

Digitized by Google

sizes of high-speed steel. These can be removed when dull and sharp ones put in their places without disturbing the setting of the boring bar itself; and where a hole is to be threaded, the threading cutter can be put in place of the boring cutter, and readily set square with the work.

The bar *A* at the left of Fig. 73 is perhaps the most simple, having a round cutter held in place by a screw bearing on a flat place on top of the cutter. Next comes a square cutter, *B*, inserted at an angle so as to reach ahead of the bar, and also held by the screw. Numerous modifications of this can be made to suit individual ideas.

AN INSIDE THREADING TOOL

The threading tools *C* and *D* can have either a plain round cutter, clamped by splitting the bar, or a threaded cutter, as shown. The object of the thread is to make it easy always to put the cutter back in the same place after grinding, the threads locating it with the point the same distance from the bar.

There is no need of cutting a full thread on the cutter; in fact a single cut with the threading tool will be sufficient for the threads in the bar to bite into. To make it easily removable, file away the thread at the sides of the hole, and also on the cutter. Then by turning the cutter at right angles, it can be slipped into place, given a quarter turn, and clamped ready to go to work.

CHATTER IN BORING

Work that overhangs to any great extent will chatter in boring as in turning. This can generally be stopped by supporting the work on the outside with a steady rest of some sort. On very thin work this may not be the case, and here it will be helped by lightly forcing in a piece of wood beyond the point to be bored, taking care not to spring the work. This helps stop the vibration, which is what causes chattering. In turning hollow work on the outside the chatter can often be stopped, by filling the inside with waste, forced in fairly tight. This is simply another case of stopping the vibrations.

PREVENT DAMAGE TO CHUCKS

One point in boring, both for chuck and face-plate work, is to be sure to allow a space behind the work for the tool to break through, if the hole goes clear through the work, so as to save digging into the face plate or chuck. This can be done by placing parallel strips behind the work, out of the way of the bore, or by having a ring which can

Digitized by Google

serve the same purpose. There is no excuse for ruining a chuck or face plate in this way.

PRECISION DRILLING AND REAMING

For some classes of work, the kind of drill shown at *A*, Fig. 74, herewith, would be ideal. Drills like this can be made quickly from drill rod and are commonly known as cannon drills. They will follow the guide of the bushing precisely, and can be used as reamers also. For brass they work as well, and can be made more quickly, as shown at *B*. They are just slanted off exactly to one-half the diameter at the end, and the proper clearance given. For accuracy they are much superior

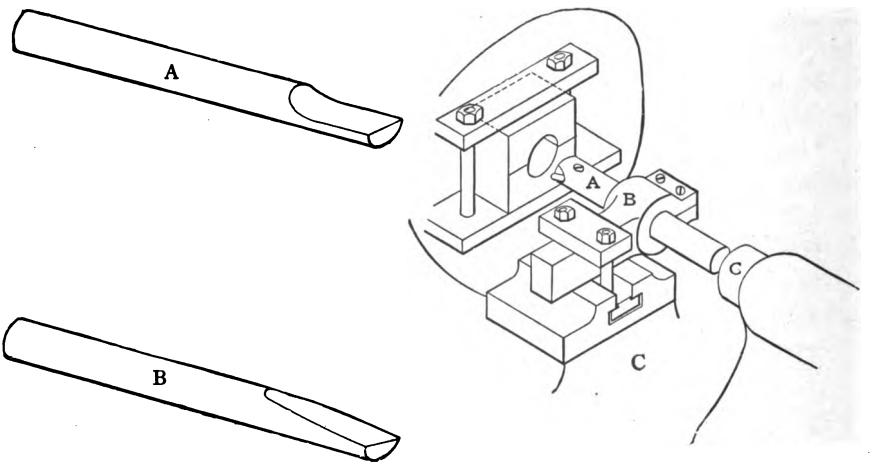

FIG. 74.—Boring tools.

to the twist drill. The hole made will be the size of the hole in the bushing, even if the drill is not a close fit in it.

NICE BORING IN THE LATHE

One of the essential features in using the boring bar in the lathe is to have the bar supported as close to the cutting edge as possible. Fig. 74 shows a method at *C* which is used by some toolmakers with considerable success. The work is clamped to an angle plate fastened to the face plate, so that it can be held perfectly square and not sprung, as is sometimes the case when we attempt to pull the work back against the face plate by two or more bolts.

As shown, the boring tool *A* is clamped in the holder *B* so that the tool-block and carriage travel with the bar when fed into the work by

Digitized by Google

the tail spindle *C*. In some cases the tail spindle is not used for this purpose, and the bar is fed into the work solely by the carriage. Another way is to move the holder *B* as close to the work as possible and feed the bar *A* through it by the tailstock *C*, as this keeps the support close to the outside of the work at all times. On the other hand, it allows the tool to spring more as it gets farther into the hole, for the cutting point is constantly going away from the support to the bar, while if it is clamped in the holder, the cutting point is at a constant distance from its support at all times, so that the spring of the bar should be practically constant.

Digitized by Google

CHAPTER VI

TAPER TURNING AND BORING

Next to selecting the change gears for thread cutting, the question of how much to set the tailstock over for a given taper is asked more often than any other. While it is a simpler problem than the other, in some ways it has some points which are not always clear.

MEASURING THE TAPER

The first thing to consider is just what the taper is, as this is sometimes a point for differences of opinion. Some measure the taper on each

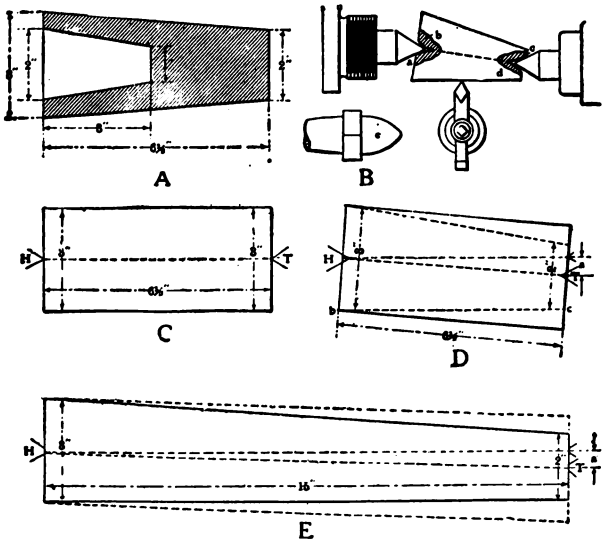

FIG. 75.—Turning tapers.

side, while the usual way is to take the total taper, as with pipe threads. The standard pipe taper is ¾ inch to the foot, which is the same as $^1/_{16}$ inch to the inch, or 1 inch in 16 inches. In many cases it is easier to have the taper per inch, but we have to take these things as they come to us on the blue-prints or drawings.

The amount of taper depends on the diameter at the two ends of the taper part of the bar and on the length of the taper, but the amount of offset for the tailstock depends on the length of the *whole bar* regardless of how much is turned taper. In Fig. 75 *A* is a section of a taper plug

Digitized by Google

with a taper hole. The difference in diameter is 1 inch in both cases, but the taper of the hole is much sharper, as it is less than half as long as the plug. The outside is 1 inch taper in 6½ inches, while the hole is 1 inch in 3 inches.

THE LATHE CENTERS

There is some question as to what effect the depth which the centers enter the work has on the setting over of the tailstock; but as it is practically out of the question to set it over the exact distance the first time in any case, this need not enter into the question for general work. *B* shows a very short piece being turned at a sharp taper. It can be seen how the outer edge *a* and the point *b* bear on one end; on the other it is opposite, as in *c* and *d*. This is very hard on centers and makes it difficult to keep them from wearing. In fact, if much taper work is to be turned, a point more blunt than the usual 60 degrees may be found better. Some use a somewhat rounded point, as in *e*, for taper work.

Forgetting about the center and its action and considering that the work is held between the points of the center as in *C*, *H* being the head and *T* the tail center, how much must we set the tailstock *T* over to cut the outside taper shown in *A*? This is 3 inches at one end and 2 inches at the other, so we must reduce the small diameter 1 inch, which means ½ inch on a side, and we set the tailstock over ½ inch, as at *a* in *D*. The tool moves along the line *b c* and cuts off ½ inch at the small end, running out at *b*. If the tailstock has been set over just ½ inch, the outside will be the correct taper, as shown by dotted lines.

In *E* the tailstock is set over the same amount and the small end reduced to 2 inches as before; but as the piece is 15 inches long instead of 6½ inches, the taper per inch or per foot is very much less.

COUNT FULL DISTANCE BETWEEN CENTERS

In Fig. 76, *A* shows a straight bar in the lathe before setting over the tailstock; *B* with tailstock set over and *C* with the bar turned to the desired taper. Calling this bar 3 inches in diameter and 30 inches long, how much must it be set over to make a taper of 2 inches in 24 or within 6 inches of the whole length?

As the taper is 2 inches in 24 or 1 in 12 inches or $^{1}/_{12}$ of an inch in 1 inch, in 30 inches it would be $^{30}/_{12}$ or 2½ inches; so the tail center must be set over one-half of this or 1¼ inches. An example of this work is in turning the taper on the end of a piston rod, where the taper may be 6 inches long and perhaps an inch to the foot, as in the above case. The rod may be 48 inches long, and the whole length must be considered in setting over the tail center. In 48 inches the taper would be $^{48}/_{12}$ or 4 inches, so that the tailstock would have to be set over 2

Digitized by Google

inches. The two points to remember are the getting of the right taper and always to consider the total length of the piece regardless of the taper portion. And it makes no difference where the taper portion is, whether at the tail end, the middle or near the headstock, the set-over is the same in any case.

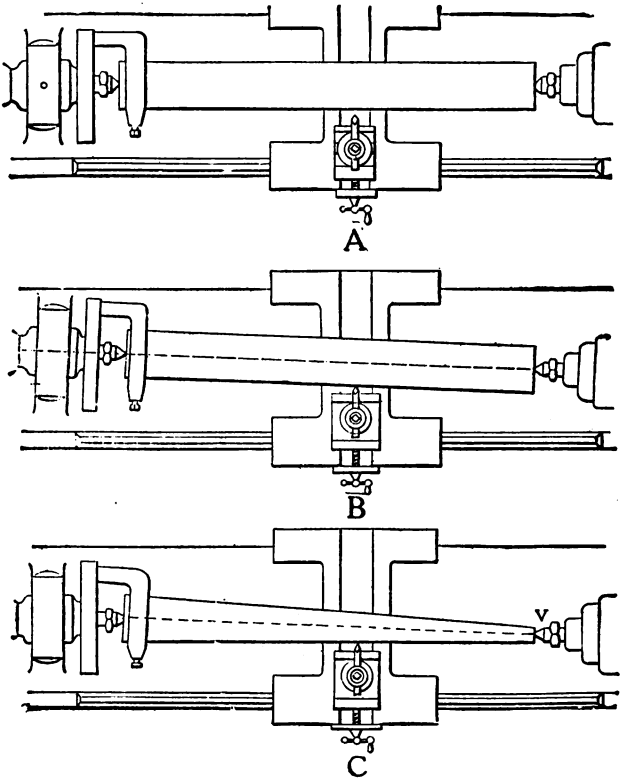

FIG. 76.—Setting over the tailstock.

WAYS OF FIGURING TAPERS

It is generally easier to figure tapers if we reduce them to the amount per inch in order to get at the offset. If the taper is given per foot, we divide it by 12, as, if it is pipe-thread taper of ¾ inch per foot, we have $^1/_{12}$ of ¾ or $^3/_{48}$ or $^1/_{16}$ inch per inch. If the taper is given 1 in 8 or 1 in 15, the taper per inch is of course ⅛ or $^1/_{15}$ inch to the inch.

Tapers are frequently given in degrees, and in such cases they are usually turned with a compound rest divided into degrees; but it is sometimes handy to know what the taper would be in inches. Table 2 will help if the taper is marked in degrees.

Digitized by Google

TAPERS IN DEGREES

This table shows that to cut a taper of 4 degrees on a bar 12 inches long means a total taper of 0.838 inch, and that the tail center must be set over practically 0.35 inch.

TABLE 2.—TAPERS IN DEGREES AND INCHES PER FOOT

Total Taper in Degrees	Equivalent Taper per Foot	Set Over Tailstock or Taper Attachment per Inch of Length
1	.20952	.00873
2	.41904	.01745
3	.62832	.02618
4	.83808	.03490
5	1.04688	.04362
6	1.25664	.05234
7	1.46520	.06105
8	1.67616	.06976
9	1.88496	.07846
10	2.09376	.08716
11	2.31040	.09585
12	2.51328	.10453
13	2.71680	.11320
14	2.93140	.12187
15	3.14064	.13053

TABLE 3.—TAPER AND SET OVER FOR TAILSTOCK

Total Taper in Inches per Foot	Set Over Tailstock or Taper Attachment per Inch of Length
3/32 — .09375	.0039
1/8 — .125	.0052
3/16 — .1875	.0078
1/4 — .25	.0104
3/8 — .375	.0156
1/2 — .5	.0208
5/8 — .625	.026
3/4 — .75	.0312
7/8 — .875	.0364
1 — 1.	.0416
1 1/4 — 1.25	.052
1 1/2 — 1.50	.0624
1 3/4 — 1.75	.0728
1 — 2.	.0832

Digitized by Google

TABLE 4.—TAPERS IN DEGREES AND THE EQUIVALENTS IN INCHES

Deg.	Inches	Deg.	Inches	Deg.	Inches	Deg.	Inches
1	0.0175	7½	0.1310	25	0.4434	45	0.8284
2	0.0349	10	0.175	30	0.5360	50	0.9326
3	0.0524	15	0.2633	35	0.6306	55	1.0411
4	0.0708	20	0.3526	40	0.7279	60	1.1547
5	0.0873						

The next two tables are guides in the opposite direction, giving something of an idea as to what angle a given taper is. Taking the pipe taper of ¾ inch to the foot or $^1/_{16}$ inch to the inch, what angle is it? Consulting a table of decimal equivalents or dividing 1 by 16 gives 0.0625, and this is between 3 and 4, very nearly 3½ degrees.

In the same way a taper of 1 in 12 or $^1/_{12}$ inch to the inch is 0.083, which comes very close to being 5 degrees; to cut this, we set the tailstock over 0.0416 inch for every inch of length in the bar.

ANOTHER WAY OF TURNING TAPERS

Many lathes have a taper attachment consisting of a bar at the back *A*, on which a shoe slides and moves the tool-block *T* through the link *E*, as shown by *D*, Fig. 77. The cross-feed screw is of course disconnected so that the tool-block is free to slide under control of shoe. Blocks *B* and *C* are fastened to the back of the lathe and hold the ends of the bar *A*, as shown, at any desired angle, the angle of the bar giving a similar taper to the work. As shown, the bar would be turned smaller at the head end than the tailstock, just the reverse of the usual way.

These bars are graduated at the ends, sometimes in inches and fractions, sometimes in degrees, sometimes inches at one end and degrees at the other. Some lathes have the bar swing from one end only. This plan allows a much better contact of the centers in the work and has many advantages. Credit for this device belongs to Dwight Slate, of Hartford, Conn., who brought it out in 1867.

BORING TAPER HOLES

Most taper boring is done with a compound rest, the piece of work being held in a chuck or strapped to the face plate and the outer end supported in a steady rest. But there are many jobs which can be handled by driving the work on an arbor or mandrel, as in *E*, Fig. 77, and setting the arbor over just as though that were the piece to be tapered, except that for boring, the tailstock must be set over the other

Digitized by Google

way, as will be seen in the illustration. This is a pulley for a friction-clutch countershaft, and is bored with a regular lathe tool.

If the taper is ⅛ inch to the inch and the arbor 24 inches long, the total taper would be 3 inches and the offset one-half of this, or 1½

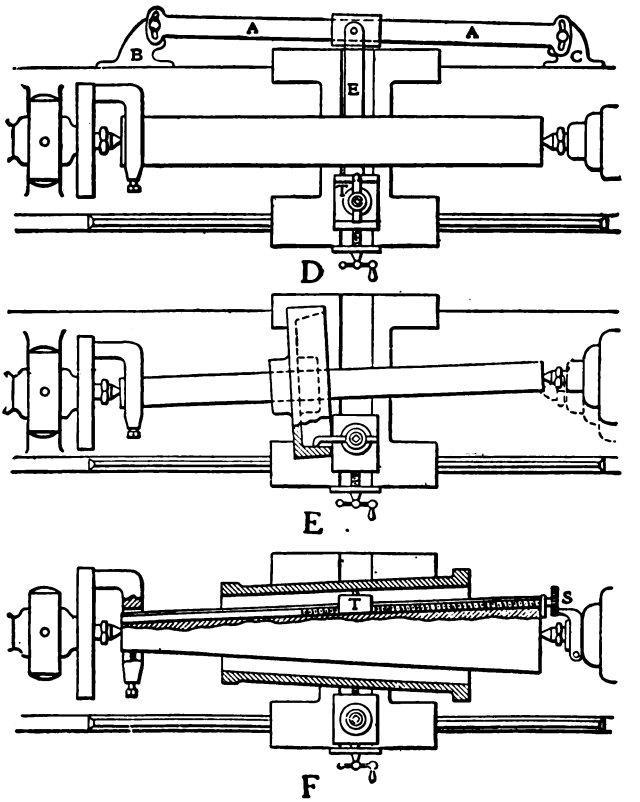

FIG. 77.—Other taper methods.

inches. With a shorter arbor, say 16 inches, the offset would be only 1 inch, and so on.

USE OF BORING BAR

Long taper holes are sometimes bored by using a star-feed boring bar. The tailstock is set over in the usual way and the work driven from the face plate, being supported by steady rests or otherwise. The bar does not turn in this case, but is held stationary by the tailstock while the live center turns in the bar. The star feed must also be worked by a pin or pins, which moves around with the work so as to strike the

Digitized by Google

star wheel once or twice during the revolution of the work, according to the feed desired.

For special work it may be better to make a bar of the right taper and drive the bar while the work is held on the lathe carriage, as *F*, Fig. 77. The tool *T* travels along the dovetail slide in the bar, driven by the screw, which is turned a portion of a revolution at each turn by one prong of the star wheel striking the stop on the tail spindle at *S*.

CUTTING TAPER THREADS

When it comes to cutting a taper thread, there is a difference of opinion as to the correct method.

In straight work we set the threading tool square with the surface to be threaded, and some do this with tapered work as well. It is easier but not right, as will be seen at *A*, Fig. 78. This makes the front side of the thread almost at right angles to the center line, and the back of the thread becomes more nearly parallel and has a very poor hold on

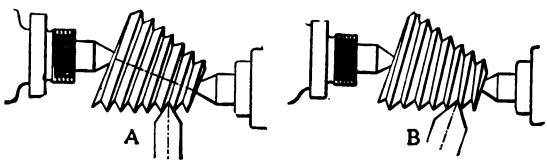

FIG. 78.—Cutting taper threads.

the other piece which screws into or on it. The angles would vary with every taper, being less objectionable as the taper decreases.

The proper way is to set the thread tool at *right angles with the center line* of the piece, as shown at *B*, as this gives an equal angle to both sides of the thread, although the back side is necessarily shorter than the front; but it will hold better than the oher.

To do this, hold your thread gage in line with the points of the centers, either by holding a scale between the centers or in any other way that is easy for you. The tool is shown in position in both *A* and *B*, and the setting of the tool is important if you want good threads on the work.

POINTS TO REMEMBER ABOUT TAPER WORK

The main points about taper work are:

Always consider the length of the work or the distance between centers instead of the length of the taper portion.

Make the offset half the amount of the total taper.

Always set the point of the tool at the height of the lathe center in

Digitized by Google

taper work. If it is set above or below the center there will be a slight change in the taper as the diameter is reduced. This is a very important point to remember.

In cutting threads, set the tool square with the center line of the work and not square with its surface. Set it at height of center.

It is always well not to set the tailstock over the full amount at first, so that the small end will be larger than required, rather than smaller.

In making long taper fits it is easier to have the bearing for a short distance on each end with a relief in the center, and this generally answers the purpose equally well.

SETTING COMPOUND RESTS

The difficulty experienced in measuring angles and setting dividing heads and compound rests comes mainly from two causes: A confusion of ideas as to whether half of the total angle is meant and the position of the base line.

In the compound rest we have the work measured in angles from a line drawn between the lathe centers while the slide is at right angles to this as in *A*, Fig. 79. If we have to turn the bevel on a valve-seat reamer that is 60 degrees total angle, we must set the slide rest at 30 degrees from the line of the centers. This very seldom means that we can set it to 30 degrees on the compound rest as they are usually divided to read from the cross-movement at right angles to the center.

Perhaps the easiest way is to swing the compound rest parallel to the lathe centers with the handle toward the headstock, and the two 45-degree marks come together if they are divided in this way. Then move the handle end out until 30 degrees have passed by the 45-degree mark, or until 15 degrees on the upper coincides with the 45 if both are graduated. No matter how it is divided, move the compound rest 30 degrees without regard to the numbers as they appear.

When facing work to any desired angle and the work is normally in line with the cross-slide, read the divisions just as they are graduated, bearing in mind that each degree the slide is set off means 2 degrees total angle for the work.

A, *B* and *C*, Fig. 79, show three methods of graduating compound rests on a lathe or swivel head on a planer. In *A* the base is divided into 45 degrees each side of a zero line at the side or at right angles to the cross-slide. With this graduation the scale shows the degrees moved through by the tool-slide with reference to the cross-slide. If we set it to 15 degrees we can face off a piece 15 degrees on each side of the end, but this would leave the end with a total angle of 150 degrees with the center line of the work.

Digitized by Google

In *B* the graduations are reversed, being on the upper slide, and the zero on the base. The results are the same except that we read on the opposite side of the zero mark of the graduations; swinging the

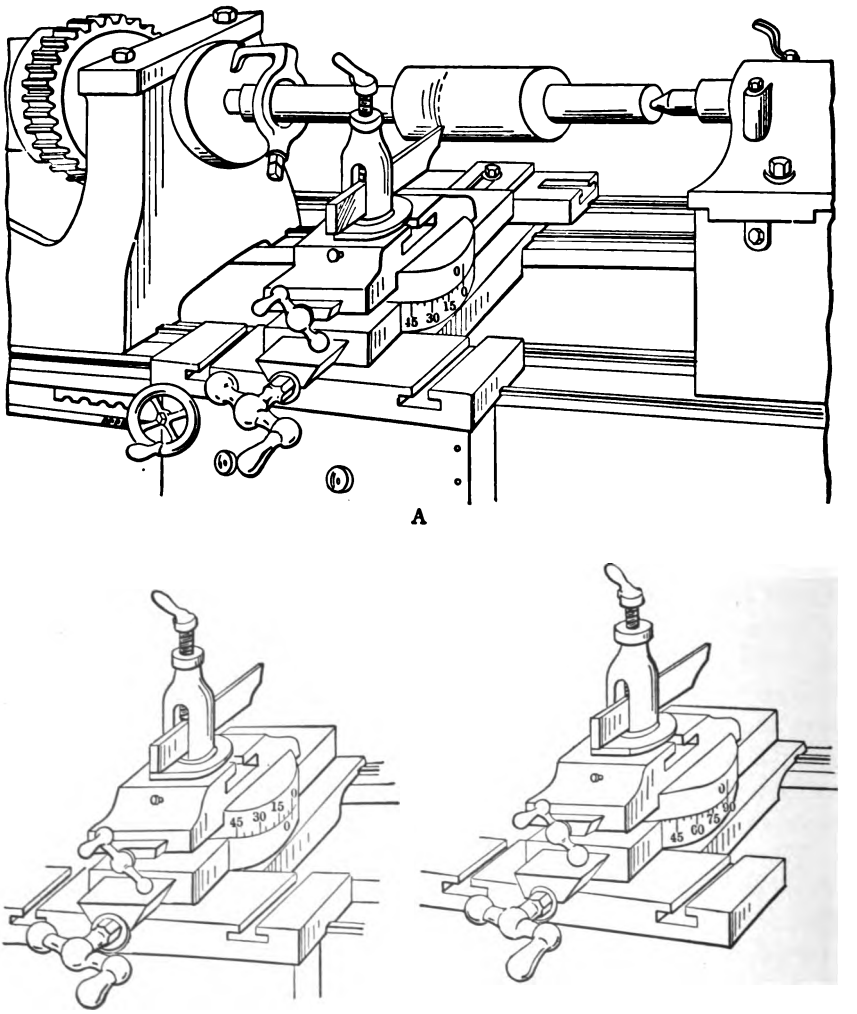

A B C

FIG. 79.

upper slide to the left 15 degrees, we must read the angle on the side of the scale now hidden from view.

C shows a different plan and one which has some things to recommend it: the 90-degree mark in place of the zero, in A, the 75-degree

Digitized by Google

in place of the 15, but, of course, the 45 comes in the same place on account of its being half-way between the two.

This method of graduation shows the exact angle that will be cut each side of the center line, and we get the total angle by doubling the figures of the graduation. If we move it to 75 it will cut 75 degrees each side of the center line. If it is moved to 45 it cuts a 90-degree total angle, and if to 60 it cuts 30 degrees away on each side, leaving 120 degrees included angle. Bearing this in mind, there should be no confusion as to what angle will be cut.

After one becomes familiar with the divisions of the machine he is handling, it is easy to set by the numbers, but as they are apt to be confusing, it is safer to check the reading by counting the degrees from the point when the slide is parallel with the lathe centers.

Table 5 gives the tapers most commonly used in both degrees and inches per foot. It will save time and trouble in figuring out the desired taper.

TABLE 5.—A TABLE OF COMMON TAPERS

Taper per Foot	Angle B		Taper per Foot	Angle B		Taper per Foot	Angle B		Taper per Foot	Angle B	
A	Deg.	Min.	*A*	Deg.	Min.	*A*	Deg.	Min.	*A*	Deg.	Min.
$\frac{1}{8}$	0	36	$1\frac{5}{8}$	8	53	$5\frac{1}{4}$	23	38	$8\frac{3}{4}$	36	6
$\frac{1}{4}$	1	12	2	9	28	$5\frac{1}{2}$	24	37	9	36	53
$\frac{3}{8}$	1	47	$2\frac{1}{4}$	10	37	$5\frac{3}{4}$	25	36	$9\frac{1}{4}$	37	36
$\frac{1}{2}$	2	23	$2\frac{1}{2}$	11	46	6	26	35	$9\frac{1}{2}$	38	21
$\frac{5}{8}$	2	59	$2\frac{3}{4}$	12	54	$6\frac{1}{4}$	27	30	$9\frac{3}{4}$	39	5
$\frac{3}{4}$	3	35	3	14	2	$6\frac{1}{2}$	28	25	10	39	48
$\frac{7}{8}$	4	10	$3\frac{1}{4}$	15	9	$6\frac{3}{4}$	29	21	$10\frac{1}{4}$	40	30
1	4	46	$3\frac{1}{2}$	16	16	7	30	15	$10\frac{1}{2}$	41	12
$1\frac{1}{8}$	5	21	$3\frac{3}{4}$	17	21	$7\frac{1}{4}$	31	8	$10\frac{3}{4}$	41	52
$1\frac{1}{4}$	5	57	4	18	26	$7\frac{1}{2}$	32	1	11	42	32
$1\frac{3}{8}$	6	32	$4\frac{1}{4}$	19	30	$7\frac{3}{4}$	32	50	$11\frac{1}{4}$	43	9
$1\frac{1}{2}$	7	7	$4\frac{1}{2}$	20	33	8	33	43	$11\frac{1}{2}$	43	47
$1\frac{5}{8}$	7	43	$4\frac{3}{4}$	21	36	$8\frac{1}{4}$	34	30	$11\frac{3}{4}$	44	24
$1\frac{3}{4}$	8	18	5	22	37	$8\frac{1}{2}$	35	18	12	45	0

Digitized by Google

CHAPTER VII

THREAD CUTTING

There is nothing mysterious about thread cutting. If we extend the back end of the spindle, cut 6 threads per inch on it and use a rig like a fox lathe, it is clear that we will cut a 6-thread screw in the lathe. The engine lathe is just as simple only we put the lead screw down in front of the bed and drive it by gears, part of which are hidden.

If the lead screw is geared "even," that is, if it makes one turn for each turn of the spindle, it must be clear that we will cut the same thread in the lathe as there is on the lead screw. For if the lead screw is 6 threads to the inch and makes one turn to each turn of the spindle, the carriage and the tool must move $^1/_6$ of an inch for each turn of the spindle.

To test this put gears having the same number of teeth on both the stud and the lead screw and see if you cut the same thread as the lead screw. If not, take the *thread cut* as the pitch of the lead screw in all calculations to be made.

Having found what thread will be cut with "even" gears, it is easily seen that to cut a coarser pitch thread the lead screw must be driven faster than the spindle, while to cut a finer pitch the lead screw must run slower than the spindle. This means that for a finer pitch the larger gear must go on the lead screw, and for a coarser pitch the small gear goes on the lead screw.

Calling the lead screw 6-pitch and wanting a 3-pitch thread, the lead screw must turn twice as fast as the spindle, so that the stud gear must have twice as many teeth as the screw gear. This means that a 24 on the lead screw and a 48 on a stud would cut a 3-pitch thread on the work. If, on the other hand, a 12 thread is wanted, the screw must turn half as fast as the spindle, so that the same gears can be used, but the 48 goes on the lead screw and the 24 on the stud.

FIGURING GEARS FOR THREAD CUTTING

There are many ways of figuring gears, but they are all based on the proportion between the movement of the thread tool and the revolutions of the lathe spindle.

Digitized by Google

Take plenty of time to get the principles on which screw cutting is based fixed in mind before going further, as success depends on that. When the idea is thoroughly grasped any job of thread cutting that comes along can be handled without a moment's hesitation.

Perhaps the easiest rule is to multiply both the thread to be cut and the pitch of the lead screw by any number (the same number in both cases) that will give gears found in the set. If the lead screw is 4 to the inch and we wish to cut a 10 thread, multiply both 4 and 10 by any number such as 6, giving 24 to 60; or by 5, giving 20 to 50. Put the gear obtained by multiplying the thread to be cut, on the lead screw, and the other on the stud. The reason for this is that the thread to be cut depends directly on the revolutions of the lead screw. When the thread to be cut is finer than the lead screw, it is clear that the lead screw must turn slower than the spindle, so the larger gear goes on the lead screw.

This shows us why we make the rules as follows:

1. *To find the gears for cutting any thread.* Multiply the thread to be cut and the lead screw by any number that will give two of the gears in the train. Always multiply both the thread to be cut and the pitch of the lead screw by the same number. Put the gear found by multiplying the thread to be cut on the lead screw and the other on the stud.

2. *To find what thread will be cut by any pair of gears.* Multiply the pitch of lead screw by its gear and divide by the gear on the stud.

3. *To find gears to cut a thread faster than* 1 *to the inch.* Divide the distance between one complete turn by the distance between threads in the lead screw. This shows how many times the lead screw must turn for each turn of the spindle. Use gears that will do this and you are all right.

Examples: Lead screw 5 to inch to cut a 12 thread? Multiply both by 5. $5\times5=25$, the gear for the stud. $5\times12=60$, the gear for the lead screw.

What thread will be cut by a 64 gear on lead screw, 48 on the stud and lead screw 4 to inch?

Multiply 64 by 4 as in Rule 2, and divide by 48. $64\times4=256$. Dividing by 48 gives $5^1/_3$ threads per inch. Prove this by Rule 1, using 12 as a multiplier.

What gears will cut a thread $1\frac{3}{4}$ inch pitch, lead screw 4 to the inch?

Lead screw pitch=$\frac{1}{4}$ inch and $1\frac{3}{4}={}^7/_4$ so the thread to be cut is 7 times as fast as the lead screw, and the lead screw must travel 7 times as fast as the spindle. This will be impossible without compounding, in most cases.

Digitized by Google

COMPOUNDING GEARS

The compounding of gears is simply a way of avoiding the use of very large gears and of requiring a much larger number of gears in the set. If the lead screw is 4 to the inch and you want to cut a 36 thread, the screw must turn only $^1/_9$ as fast as the lathe spindle.

As the screw moves so much slower than the spindle we must put the small gear on the stud. We seldom use a smaller gear than 24 teeth and $9 \times 24 = 216$ for the gear on the screw. To avoid this we use a compound gear set between the stud and the screw, varying the proportions of the compound gears as we think best.

In this case we can take a 24 and a 72, making a 3 to 1 combination, and reduce the motion between the stud and the screw to one-third, so that we select the gear for a thread $^1/_3$ of 36 or 12. As 12 is three times the lead of the screw, the gear on the screw must be 3×24 or 72. So we have the 24-tooth gear on the stud mesh into the 72 of the compound, and the 24 of the compound mesh into the 72 on the screw.

Analyzing this we can see that the 24 gear of the stud will turn the 72 gear of the compound just $^1/_3$ of a turn or 24 teeth. At the same time the 24 gear of the compound is also turned $^1/_3$ of a revolution or 8 teeth, and moves the 72 on the screw an equal amount, which is $^1/_9$ of the whole number of teeth or $^1/_9$ of a turn, so that the thread tool has only moved $^1/_9$ of $^1/_4$, or $^1/_{36}$ of an inch.

The gear-feed boxes or quick-change devices for threads are simply combinations of compound gears which can be varied by sliding keys or by other means. These give a variety of gear combinations which can all be traced out in this same way with a little care, always remembering that there is nothing mysterious about any of them.

CATCHING THREADS

The time wasted in letting a lathe run the carriage back, even with a fast backing belt, is not good practice on long threads. If we stop the lathe at any point on a threading job, unlock the carriage and move it along just an inch, it will always catch the thread unless it is faster than one to the inch.

If both the pitch of the thread being cut and the lead screw are even numbers, such as 2, 4, or 6, the thread can be caught at any half inch. But the way to save time is to be able to do this without stopping the lathe or doing any measuring except with your eye. Stopping the lathe with the dog in any particular position takes time and is unnecessary if you are careful and get a little practice.

Digitized by Google

If the lathe is geared even, or the work being threaded is the same pitch as the true pitch of your lead screw, you can throw in the half nut anywhere and have no fear about catching the thread. This is also true if the thread being cut is any multiple of lead screw, but we must find a way to catch any threads that come along and do it so as to save time and yet not spoil work.

When starting the thread it is a good plan to note the position of the lathe dog, turning it until its tail is at the top. Then bring the thread-cutting tool as near the starting point as you think is safe and lock in the half nut. Now move up the tailstock body till it touches the carriage bridge, or put something on the bed that will give a positive indication, and we are ready.

It is very evident that whenever the lathe dog has its tail at the top and the carriage is back in the same position, the half nut will drop into place and catch the thread every time. So all we have to do after a cut is to open the half nut, run the carriage back to the stop or mark as the case may be, wait until the dog's tail gets to the top and close the half nut. It doesn't require that you wait till it is exactly at the top, as the eye can tell near enough to enable the half nut to catch in at the right place, for the lead screw threads are so coarse that if the nut goes in when the dog is near the top it is all right.

Another way, although not quite as rapid as the one just described, is to run the carriage back until the thread tool is near the beginning of the cut, and run it in until it nearly touches the work. Then with the half nut in hand ready to close, wait till the thread tool points to its proper position in a thread, throw in the nut and the carriage will start in its proper place. Reverse the lathe, run it back a turn or two till the tool clears the work, and then start the cut. But the other way is quicker and better in most cases.

RAPID THREAD CUTTING

Thread cutting used to be considered a ticklish job and light cuts were always in order, but the newer methods have made quick thread cutting the order of the day.

One of the best examples of this was a lot of special studs used in a gas engine. The threads are 7 pitch, 1⅛ inches in diameter, and the thread is 2½ inches long. These were chased in an engine lathe with a single-point tool in from 4 to 5 cuts by a boy who has learned to catch threads almost with his eyes shut, at the rate of 13 studs an hour. And the threads were as smooth as necessary, better than many chased at a slower rate, and accurate as to fitting the nuts.

Digitized by Google

There is a little trick about this that is worth knowing. The first chip is a reasonably heavy one, perhaps half the depth of the thread because the area cut out is comparatively small. Then on the next cut he deliberately misses the first thread and cuts another the same depth as the first, as shown in Fig. 80. The next time he splits the two cuts and takes out another big chip from the center, getting the thread down nearly to size and not having any of the heavy crowding chips from both sides as when you cut straight down from the center every time. The fourth or fifth chip finishes the stud to size and leaves a good thread.

Some makes of lathes have an indicator for this purpose. The idea is old, but is not common, probably because there are comparatively few

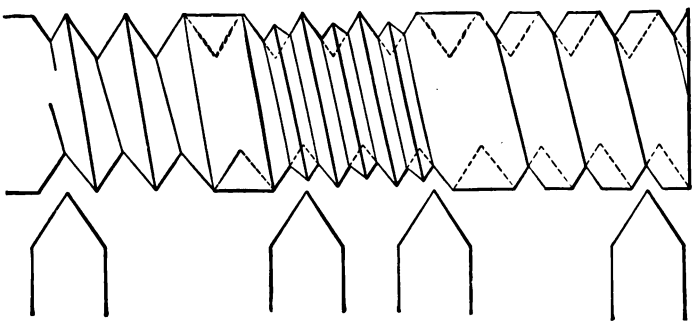

FIG. 80.—Splitting threads for rapid work.

long screws to be cut and the necessity for such a device is not often felt.

MEASURING THE THREAD

The old notion of measuring the thread with a pair of broad-nosed calipers to go over two or three threads has given way to the better plan of measuring half-way down the sides of the thread. Measuring the top gives the outside diameter, but the threads should fit on the sides and not the top or bottom.

The bottom of the thread depends entirely on the point of the thread tool, while the top depends on whether the cut is brought up so as to be just sharp in a V-thread or to just the right width of flat for the United States Standard. But measuring the sides of the threads tells the story.

The most refined and accurate thread measurements are made by the use of wires laid in the threads, then the outside of the wires measured by micrometer or else a special thread micrometer, but for lathe

Digitized by Google

work, grind the points on a pair of calipers so as to touch the sides of the thread, about half way down, and then measure a bolt that fits the nut properly. Using this as the standard, you may be surprised to know how accurately you can cut threads by measuring in this way if the angle is kept right.

CUTTING THE THREAD

Having found the proper gears for the thread wanted, either by figuring out the change gears or by moving the handle in the gear box if the lathe has one, the next step is to decide on the tools to use. In some cases men seem to forget all about the question of clean cutting when it comes to thread tools, and grind up a tool to fit the thread gage without regard to top rake or easy cutting. In cutting brass the top rake can be omitted, but for iron and steel it will help in roughing out a job quickly and getting ready for the finishing cuts.

PITCH AND LEAD

Before starting to cut any threads it is best to fix in the mind what the pitch of a screw is. As usually measured, we say 10 pitch, meaning 10 threads to the inch. On the other hand we sometimes run across a drawing marked ¾ pitch, which should mean three-quarters of a turn to the inch or one turn in $1^1/_3$ inches. If it says ¾ *inch* pitch it means ¾ inch from one thread to the next.

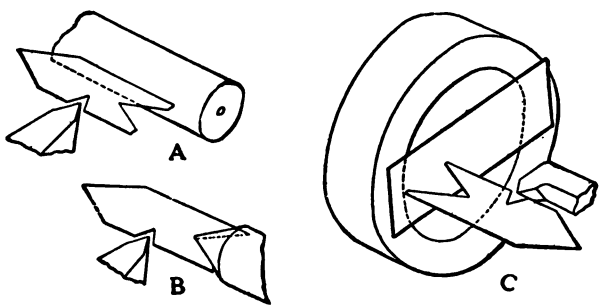

FIG. 81.—Setting thread tool.

The next point to watch is "pitch" and "lead." The *pitch* of a thread is the distance from the center of one thread to the center of the next. The *lead* of a screw is the distance a nut will advance in one revolution of the screw. If it is a single-thread screw, the pitch and lead are always the same; but for double, triple or any multiple thread, the lead is just as many times the pitch as there are multiple threads.

Digitized by Google

A double thread has a lead twice the pitch, a triple screw three times, and so on. The pitch might measure 12 with a screw thread gage, but be a quadruple thread of 3 to the inch. The angle the thread makes with the bar it is cut on tells the story here.

Grind your tool to fit the thread gage and set it square with the work, as shown in Fig. 81. This insures each side of the thread being 30 degrees. The tool can be set on straight work by resting the back side of the gage against the work and using the small V on the side to see that it is right as at *A*, Fig. 81. Some place the large V in the end over the center, as shown in *B*, but the first is usually the better way. For inside thread cutting the tool can be set as in *C* if the work is small, or by reversing the process of *A* if the hole is large enough.

ROUGHING OUT THE THREAD

The old standby for a roughing thread tool is shown in *A*, Fig. 82. This is practically a diamond lathe tool, with the sides 60 degrees,

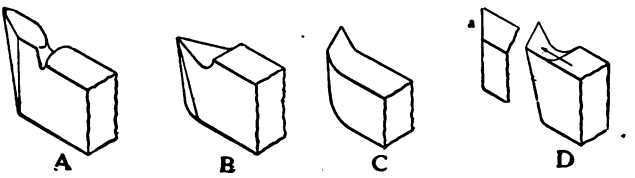

Fig. 82.—Thread tools.

plenty of top rake, and the point rounded so as to stand a heavy chip. For soft steel or wrought iron this will get out most of the metal in a hurry and leave the finishing for a tool like *B*, which, from the amount ground down on top, has seen service.

Some prefer a bent thread tool, and they are necessary at times to get up close to a shoulder. They are usually bent around as at *C* or even more than this, but an easier way is to grind the end of a straight bar as shown at *a*, in tool *D*, which is an easy tool to make and gets up to a shoulder very nicely. When ground with plenty of top rake at the front edge, it looks like *D* and is an excellent tool for what might be called angle cutting. It can also be ground with a rake from the point back toward the body, for regular or front cutting.

Most shops use one of the many threading tools with removable points, and these have the advantage of being able to reset the tool in the same place after grinding.

Digitized by Google

TAKE UP ALL LOST MOTION

One of the most frequent causes of unsatisfactory thread cutting is to have "slack" in the cross-feed screws or lost motion in the slides of the tool-block or the compound rest. Any of these is apt to allow the tool to dig into the work, and there is nothing more exasperating than this, especially if it is near the finishing cut. So it is well to have all the slides gibbed down quite tight to be sure the slack is taken out of the screws, and to have the tool clamped tight and with as little overhang as possible, before starting to cut a thread.

Sometimes, too, a slight difference in the height of the tool will make it cut much better, and for finishing a thread it is a good plan to have the tool just about at the center of the lathe. For this purpose the rising and falling tool rest on a lathe carriage is very handy, as the tool can be raised or lowered after it is set in position. With this rest the roughing cuts can be taken with the tool above the center and the tool lowered to the center for finishing.

ANGULAR FEEDING OF TOOLS

To get away from the wedging action of a V tool and to get the advantages of the side-cutting tool, some one devised what can be called the angular thread-cutting method. All indications point to Prof. John E. Sweet as the first to bring it into use.

The object of this is to get the advantage of a side-cutting tool by feeding the tool into the cut so as to cut only on one side of the thread until the roughing is all done, and then finish with the regulation tool on both sides. It is possible, however, to cut the entire thread from one side if the tool is in good shape and fed in at exactly the right angle, or the last cut can be taken by feeding the cross-slide in straight.

The swivel or compound rest is necessary for this kind of work, and it should be set at 30 degrees, as shown in *A*, Fig. 83. This has the tool shown in *D*, Fig. 81, with the top ground away so as to give a side-tool rake from the cutting edge. The tool is fed up to the work by the regular cross-slide, which should then be locked by tightening the gibs or in any other way, and the tool fed into the work by the swiveled slide. This makes the front or shearing edge *a* do all the cutting, and it will be seen that the other edge of the tool simply follows the angle of the thread. The notches *a*, *b*, *c*, *d* and *e* show different cuts and how the front edge does all the work, but still leaves a perfect thread at the bottom every time.

As a matter of fact it is very hard to cut a V-thread that is per-

Digitized by Google

fectly sharp at the bottom, and the roughing cuts should be taken with the point of the tool either rounded or flattened, saving the tool with a perfectly sharp point for the very last cuts. In fact the sharp V-thread has now been discarded by nearly everyone.

Another way of using the compound rest in thread cutting is to set it at right angles to the cross-slide, as shown at *B*, and move the thread tool first to one side of the thread and then the other, cutting on only one side at a time until the finishing cut. This method is said to be

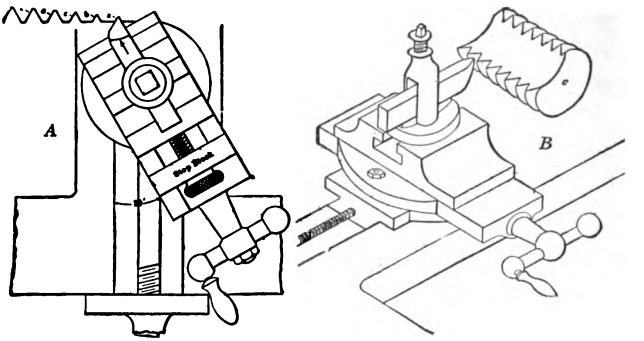

FIG. 83.—Using compound rest in thread cutting.

quite common in English shops. The thread is shown broken for clearness.

THE UNITED STATES STANDARD THREAD

The United States Standard or Franklin Institute or Sellers form of thread is so called because it was designed by William Sellers, recommended by the Franklin Institute, and has been adopted by the United States Government. This thread has the same angles as the V, 60 degrees, but has one-eighth of the depth taken off the top and bottom.

The depth of a V-thread of this pitch is 0.86 inch and of the United States Standard 0.65 inch, while the flat at top and bottom is 0.125 inch. To find the depth for any other thread, divide these figures by the number of threads to the inch. To help in allowing for the thread when boring a die or other piece with internal thread, Table 6 will be found useful. This also gives the width of the flat for the point of the thread tool, but it is fully as easy to measure this with a standard thread gage and there is much less chance of error. Simply grind the tool to fit the gage for whatever thread is to be cut, being sure it is a United States Standard thread gage and not a V.

Digitized by Google

USING THE STOP BLOCK

In feeding the tool into the work it is a great help to have a screw in the stop block with divisions on the head like a micrometer. Then you can see just how far the tool is fed in each time. This is not absolutely necessary, as you soon get to know how much of a turn to give the screw each time to allow for feeding it into the work. The stop screw and block are usually made as in *A*, Fig. 83, but for inside work it is necessary to take out the screw, move the block out and put the screw head inside the block so the head will stop against it when drawn back. This can be done away with by having a collar on the screw inside the block with space enough to allow for the deepest thread you are likely to cut. A half-inch allowance will be ample to allow the tool to be withdrawn from the cut when running back, on either outside or inside work.

DOUBLE OR TRIPLE THREAD

When a double thread is to be cut, the first thread is cut to one-half the depth for that pitch and the second thread cut half-way between

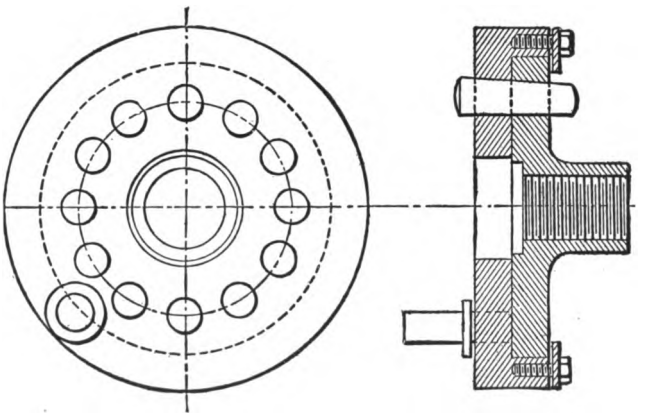

FIG. 84.—Indexing face plate for multiple thread.

the grooves of the first thread. This space can be divided by measurement, by turning the work half-way round or by turning the *stud gear* just half-way round. The last is probably the easiest except when an odd-tooth gear is on the stud. In that case it is probably easier to measure and move the carriage.

If there is much double-thread cutting to be done, the best way is to have an indexing face plate made like Fig. 84.

Digitized by Google

TABLE 6.—PROPORTIONS OF SCREW THREADS

Number of Threads per Inch	Lead of Thread	Sharp V-Thread		U. S. Standard Thread		
		Single Depth	Double Depth	Single Depth	Double Depth	Width of Flat
1	1.00000	0.8665	1.7330	0.6495	1.2990	0.1250
1⅛	0.88888	0.7702	1.5404	0.5773	1.1546	0.1111
1¼	0.80000	0.6932	1.3864	0.5196	1.0392	0.1000
1⅜	0.72727	0.6302	1.2603	0.4723	0.9447	0.0909
1½	0.66667	0.5776	1.1553	0.4330	0.8660	0.0833
1⅝	0.61538	0.5332	1.0664	0z3997	0.7994	0.0769
1¾	0.57142	0.4951	0.9902	0.3711	0.7422	0.0714
1⅞	0.53333	0.4621	0.9242	0.3464	0.6928	0.0666
2	0.50000	0.4332	0.8665	0.3247	0.6495	0.0625
2⅛	0.47058	0.4077	0 8155	0.3056	0.6113	0.0588
2¼	0.44444	0.3851	0.7702	0.2888	0.5773	0.0555
2⅜	0.42105	0.3648	0.7296	0.2734	0.5469	0.0526
2½	0.40000	0.3466	0.6932	0.2598	0.5196	0.0500
2⅝	0.38095	0.3301	0.6602	0.2474	0.4948	0.0476
2¾	0.36363	0.3151	0.6302	0.2361	0.4723	0.0454
2⅞	0.34782	0.3014	0.6028	0.2259	0.4518	0.0435
3	0.33333	0.2888	0.5776	0.2165	0.4330	0.0416
3¼	0.30769	0.2666	0.5332	0.1998	0.3997	0.0384
3½	0.28571	0.2475	0.4951	0.1855	0.3711	0.0357
3¾	0.26667	0.2311	0.4621	0.1732	0.3464	0.0333
4	0.25000	0.2166	0.4332	0.1623	0.3247	0.0312
4½	0.22222	0.1925	0.3851	0.1443	0.2886	0.0277
5	0.20000	0.1733	0.3466	0.1299	0.2598	0.0250
5½	0.181818	0.1575	0.3151	0.1180	0.2361	0.0227
6	0.166666	0.1444	0.2888	0.1082	0.2165	0.0208
7	0.142857	0.1237	0.2475	0.0927	0.1855	0.0182
8	0.125000	0.1083	0.2166	0.0812	0.1624	0.0156
9	0.111111	0.0962	0.1925	0.0721	0.1443	0.0138
10	0.100000	0.0866	0.1733	0.0649	0.1299	0.0125
11	0.090909	0.0787	0.1575	0.0590	0.1180	0.0113
11½	0.086956	0.0753	0.1507	0.0564	0.1129	0.0108
12	0.083333	0.0722	0.1444	0.0541	0.1082	0.0104
13	0.076923	0.0666	0.1333	0.0499	0.0999	0.0096
14	0.071428	0.0619	0.1237	0.0464	0.0927	0.0089
16	0.062500	0.0541	0.1083	0.0406	0.0812	0.0078
18	0.055555	0.0481	0.0962	0.0361	0.0712	0.0069
20	0.050000	0.0433	0.0866	0.0324	0.0649	0.0063
22	0.045454	0.0394	0.0787	0.0295	0.0590	0.0057

Digitized by Google

TABLE 6.—PROPORTIONS OF SCREW THREADS—*Continued*

Number of Threads per Inch	Lead of Thread	SHARP V-THREAD		U. S. STANDARD THREAD		
		Single Depth	Double Depth	Single Depth	Double Depth	Width of Flat
24	0.041666	0.0361	0.0721	0.0271	0.0541	0.0052
26	0.038461	0.0333	0.0666	0.0250	0.0499	0.0048
27	0.037037	0.0321	0.0642	0.0240	0.0481	0.0046
28	0.035714	0.0309	0.0618	0.0232	0.0463	0.0045
30	0.033333	0.0289	0.0577	0.0216	0.0433	0.0043
32	0.031250	0.0271	0.0541	0.0203	0.0405	0.0039
34	0.029411	0.0255	0.0510	0.0191	0.0382	0.0037
36	0.027777	0.0241	0.0481	0.0180	0.0360	0.0035
38	0.026315	0.0228	0.0456	0.0171	0.0342	0.0033
40	0.025000	0.0216	0.0433	0.0162	0.0324	0.0031
42	0.023809	0.0206	0.0412	0.0154	0.0309	0.0029
44	0.022727	0.0196	0.0393	0.0147	0.0295	0.0028
46	0.021739	0.0188	0.0376	0.0141	0.0282	0.0027
48	0.020833	0.0180	0.0360	0.0135	0.0270	0.0026
50	0.020000	0.0173	0.0346	0.0129	0.0259	0.0025
52	0.019231	0.0166	0.0333	0.0125	0.0249	0.0024
54	0.018518	0.0160	0.0320	0.0120	0.0240	0.0023
56	0.017857	0.0154	0.0309	0.0116	0.0232	0.0022
58	0.017241	0.0149	0.0298	0.0112	0.0224	0.0021
60	0.016666	0.0144	0.0288	0.0108	0.0216	0.0020
64	0.015625	0.0135	0.0271	0.0101	0.0202	0.0019
68	0.014705	0.0127	0.0254	0.0095	0.0191	0.0018
72	0.013888	0.0120	0.0241	0.0090	0.0180	0.00172
76	0.013157	0.0114	0.0228	0.0085	0.0170	0.00184
80	0.012500	0.0108	0.0216	0.0081	0.0162	0.00156
84	0.011904	0.0103	0.0206	0.0077	0.0154	0.00148
88	0.011363	0.0098	0.0196	0.0073	0.0147	0.00142
92	0.010869	0.0094	0.0188	0.0070	0.0141	0.00135
96	0.010416	0.0090	0.0180	0.0067	0.0135	0.00130
100	0.010000	0.0086	0.0173	0.0065	0.0129	0.00125

This shows a face-plate fixture used on various numbers of threads. On an ordinary driving plate is fitted a plate having, as shown, twelve holes enabling one to get two, three, four, or six leads if required. This ring carries the driving stud, and is clamped at the back of the plate by two bolts as an extra safeguard. All that is necessary in operation is to slack off the bolts, withdraw the index pin, move the plate the number of holes required, and re-tighten the bolts. It is used on different lathes, as occasion requires, by making the driving plates alike and drilling a hole for the index pin. It is found that the index pin

Digitized by Google

works best when made taper, and a light tap is sufficient to loosen or fix it.

With this, you cut one thread to its full depth, or a partial depth if you prefer to leave a finishing cut to be taken after they are all roughed out, then pull the index pin and turn to the right point. There are fewer chances of springing a bar if the threads are partially cut in each place and then light finishing cuts are taken in all the threads.

SQUARE THREADS

Square threads are sometimes puzzling in two ways: in grinding the tools and in cutting the thread. The width of the tool is half the pitch because the land and the space must both be the same, although some make the space a little wider to allow for play and for any varia-

TABLE 7.—SQUARE-THREAD TOOLS—WIDTH AND DEPTH OF THREADS ARE THE SAME

	WIDTH OF THREAD TOOL		
Pitch or Threads per Inch	Single Thread	Double Thread	Triple Thread
1	0.5	0.25	0.166
2	0.25	0.125	0.083
3	0.166	0.083	0.055
4	0.125	0.062	0.042
5	0.10	0.05	0.033
6	0.083	0.042	0.028
7	0.071	0.035	0.023
8	0.062	0.031	0.021

tion in the pitch. In *A*, Fig. 85, a pitch of 1 to the inch is shown. This means either the distance from center to center of threads or from the face of one thread to the corresponding face in the next thread.

DIMENSIONS OF SCREW THREADS

While the table almost explains itself, an illustration may help a little. Let it be required to make a special nut, 1 inch diameter, 12 threads per inch. From Table 6 we find the double depth of thread to be 0.1082 inch, which, subtracted from 1 inch, leaves 0.8918 inch, the required diameter of bore. This for a U. S. S. form of thread.

Or, if we wish to know how far a nut will advance for one turn of a screw having 1⅝ threads per inch, we find this from the column marked lead, opposite the number of threads per inch, to be 0.61538.

Digitized by Google

If it is a double or triple thread, we must be careful and not confuse pitch and lead. The depth of the square thread is usually the same as the width of the land or the space, although here again there is a difference of opinion, some allowing clearance at the bottom. The square thread is rather difficult to cut on account of giving clearance on the sides to avoid rubbing from the angularity of the thread.

In cutting double threads of square section, the same precautions must be observed as with V or other threads. Table 7 gives the width

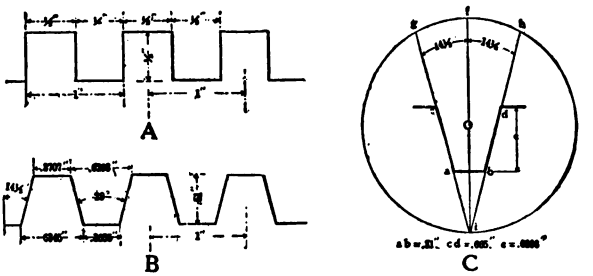

FIG. 85.—Square, acme and worm thread.

of square-thread tools for use in cutting single, double, and triple threads.

ACME THREADS

Square threads were not always easy to cut, and so it often happened that feed screws, lead screws, etc., were made flat top and bottom, but

TABLE 8.—PROPORTIONS OF ACME THREADS

No. Threads per Inch, Linear	Depth Thread	Width at Top of Thread	Space at Bottom of Thread	Space at Top of Thread	Thickness at Root of Thread
1	0.5100	0.3707	0.3655	0.6203	0.6345
2	0.2600	0.1853	0.1801	0.3147	0.3199
3	0.1767	0.1235	0.1183	0.2098	0.2150
4	0.1350	0.0927	0.0875	0.1573	0.1625
5	0.1100	0.0741	0.0689	0.1259	9.1311
6	0.0933	0.0618	0.0566	0.1049	0.1101
7	0.0814	0.0529	0.0478	0.0899	0.0951
8	0.0725	0.0463	0.0411	0.0787	0.0839
9	0.0655	0.0413	0.0361	0.0699	0.0751
10	0.0600	0.0371	0.0319	0.0629	0.0681

Digitized by Google

with slanting sides of any angle that pleased the eye of the man who ground the thread tool. As these were neither square nor V, they soon had a name of their own and were called bastard. In some parts of the country this term is applied only to odd pitches, but any old lathe hand will recall bastard threads of a great variety of shapes and sizes. No two of these were alike, and the natural course of events brought about a standard which is now known as the Acme thread. The proportions for a pitch of one to the inch are shown in *B* (Fig. 85), and Table 8 gives full details for other sizes.

TABLE 9.—BROWN & SHARPE WORM THREAD PROPORTIONS

WORM THREADS						
Pitch in Threads per Inch	Lead per Revolution	Depth of Thread	Width of Tool Point or Bottom of Thread	Width of Top of Thread	Width of Space at of Thread	Width of Root Top of Thread
1	1	0.6866	0.31	0.335	0.665	0.69
2	0.5	0.3433	0.155	0.167	0.332	0.345
3	0.333	0.2288	0.103	0.111	0.222	0.23
4	0.25	0.1716	0.077	0.084	0.166	0.17
5	0.20	0.1373	0.06	0.067	0.133	0.14
6	0.166	0.1144	0.05	0.056	0.111	0.115
7	0.141	0.0981	0.044	0.048	0.095	0.098
8	0.125	0.0858	0.039	0.042	0.085	0.086

WORM THREADS

The Acme thread is so near the worm thread that care must be taken to avoid using one for the other or getting the proportions mixed. The angle is the same, 29 degrees; but the depth is greater, as can be seen in *C* (Fig. 85). This also shows an easy way to lay out the angle of 29 degrees.

Take a piece of sheet iron, draw a circle say 2 inches in diameter; draw a line through the center, as *f i*. Take one-quarter the diameter, or ½ inch, in the dividers and mark off *g* and *h* from *f*. Connect *g i* and *h i* and the enclosed angle is 29 degrees.

The point of the tool *a b* is 0.31×the pitch: the space *c d* is 0.665×the pitch; and the height *e* is 0.6866×the pitch, according to the Brown & Sharpe standard, or practically one-third deeper than the Acme thread. The details are given in Table 9.

Digitized by Google

CHASERS AND SPECIAL TOOLS

A chaser, as known to the engine-lathe man, is a thread tool with several points, as in Fig. 86; when used, it is generally kept for finishing threads and not for roughing. The old chaser was like the one at the left, being a straight tool with threads cut in the end like a die chaser, this being cut with a hob tap. The other is a later development and though usually confined to screw machines is sometimes used in the engine lathe. It is made by cutting a thread of the desired pitch on a steel roll, milling out a flute and clamping the roll so as to bring the cutting edge at the right position on the work. It can be sharpened by grinding the face and will last until the whole roll has been ground away. Chasers are well thought of by many for finishing long threads.

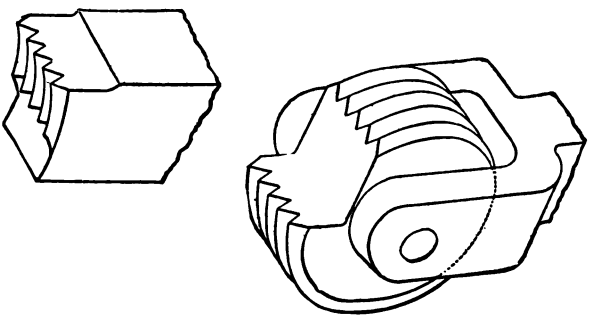

FIG. 86.—Thread chasers.

One holder will handle all the rolls you make for different pitches of threads.

Another form of threading tool might be called a turret thread cutter, in which the cutter resembles a milling cutter with different lengths to the teeth; it is known as the Rivett-Dock threading tool. The tool is brought up to the work and the shortest tooth takes a cut. Then the next longer tooth takes the next cut, and so on until the last tooth finishes the thread. There is no feeding of the tool into the work, as the cutter takes care of that and each tooth cuts only its own portion of the thread.

There is a great difference of opinion as to the best lubricant for use in chasing threads. Nearly every machinist has his pet screw-cutting oil, which includes fish oils, heavy crude oils, emulsions of soap, oil, and water, soda water with variations, etc., but perhaps most prefer pure lard oil. It is expensive, but there is no economy in saving a little money and turning out rough threads on work where it should be nice.

Digitized by Google

A TOOL FOR THREADING SLENDER WORK

This tool may help out in a difficult job of threading slender work. The thread to be cut was 14 inches long, 5 per inch and left-handed. This was for a mandrel for winding springs of No. 20 spring brass wire.

The outside diameter of arbor was 0.345 inch, the bottom of thread 0.310 inch, and it had to be perfectly straight. The whole length of arbor was 18 inches. So a guide was made out of 2-inch square steel with a whole drilled through it the size of arbor ends, fastened on a strip to fit holder for tool post, planed out a place for a thread tool

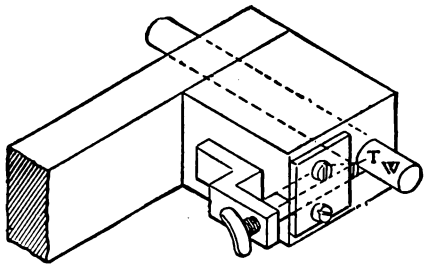

FIG. 87.—Thread tool for slender work.

worked in and out by a screw, as shown in Fig. 87. The rest was quite easy, as this held the work straight while being threaded.

TESTING THE LEAD SCREW OF A LATHE

The lead screw is very seldom considered in buying a lathe unless it is bought especially for screw-cutting purposes. This screw can be easily tested on its own lathe to see what results it will produce. Having a large face plate on the lathe, take a surface gage, set it on a parallel across the ways and scribe a line on the edge. Run the carriage back as far as possible. Engage the half-nut. Gear for 4 pitch, then one revolution of the spindle will make the carriage travel ¼ inch. On the ways behind the carriage clamp a small block of cast iron *A*, Fig. 88, in which is inserted a micrometer barrel, as shown in the sketch. On the carriage is a block *B* with a pin in the end the same diameter as the micrometer spindle. A 6-inch distance rod is also needed.

Turn the face plate *D* one revolution until the line is even with the needle of the surface gage *C*. Set the micrometer barrel at zero against the carriage. Turn the face plate 24 revolutions, try the 6-inch distance rod and see whether the distance is short, long, or correct. Move the

Digitized by Google

micrometer-barrel block up to the carriage and again set at zero; turn the lathe 24 revolutions more and test again. It is probably best to

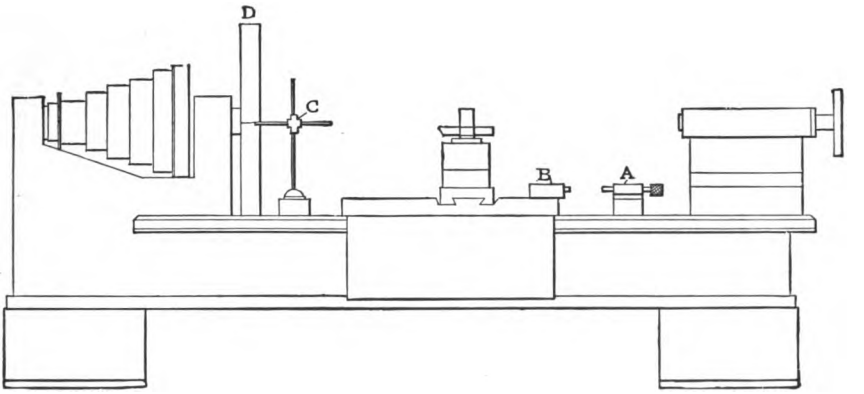

FIG. 88.—Testing the lead screw of a lathe.

test the screw every 6 inches, as this will be near enough for ordinary screw cutting.

Digitized by Google

CHAPTER VIII

THE LATHE INDICATOR AND OTHER SUGGESTIONS

Perhaps the simplest example of using an indicator in a lathe is for locating a piece of work on the face plate or in a chuck. For ordinary work, where the limit of accuracy may not be closer than a thirty-second of an inch, the indicator is hardly necessary as you can locate the prick-punch mark or the hole, either by the eye or with the point of a lathe tool. But for really nice work the indicator is a fine tool, even in its

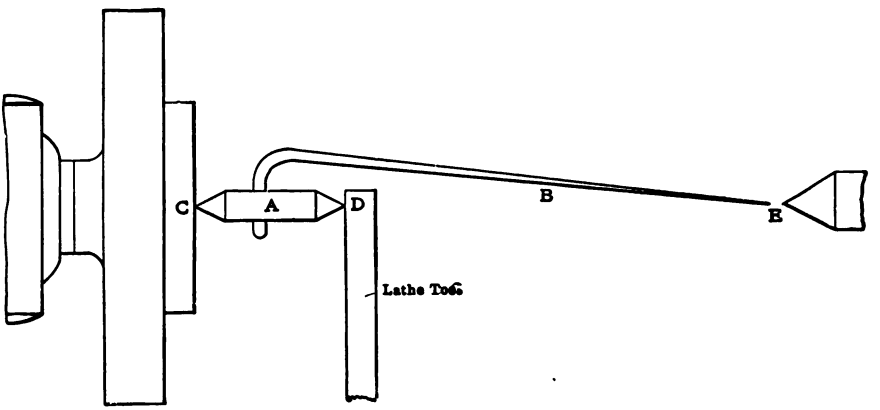

FIG. 89.—Another simple lathe indicator.

cruder forms as shown in Fig. 89, which is one of many types in general use.

This is simply a piece of steel, *A*, pointed at both ends and having the steel wire *B* fastened in a crosswise hole, with the long end bent down so as to be in line with the centers of *A*. It will be readily seen that as the arm *B* is much longer than the piece A the end of the pointer will multiply the distance the point *C* is out of center when the work is revolved.

When the point *C* is exactly central, the point *E* will remain stationary; but if the point *C* is out of center one-hundredth of an inch the point *E* will travel in a circle having a radius as many times this as the distance from *A* to *E* is longer than from *C* to *A*.

Digitized by Google

To use this, a punch mark is made on the side of a lathe-tool shank and this fastened in the tool-post so that the punch mark comes as near the center of the lathe as possible. Then the point *D* is placed in the punch mark, the point *C* on the work and the work revolved, usually by hand. Watching the point *E*, tells the story whether it is sighted by the dead-lathe center or not. When the end of the pointer stands perfectly still while the work is being turned, the center of the work is located at the exact center of the lathe.

FINISHING UP WORK

In the various operations of machining, fitting, and assembling of machinery and tools, too often little details in method and finish are

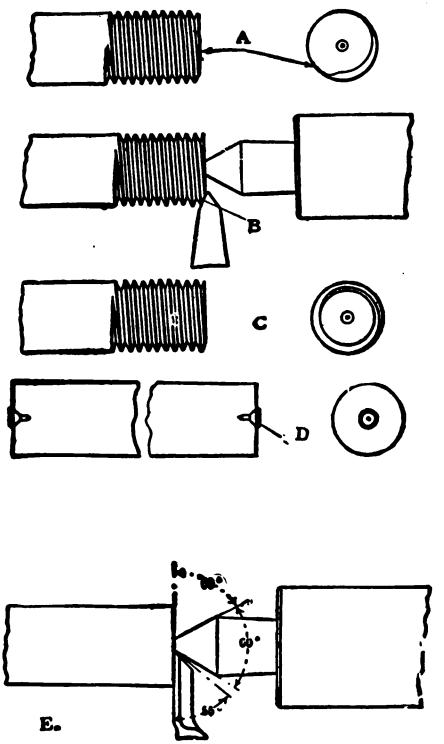

FIG. 90.—Finishing the ends of work.

overlooked, resulting in a finished article which is defective in operation, and unsightly to the truly mechanical trained eye.

Were the little omissions referred to confined to the novice, it would be hardly worth while to mention them, but past experience has proved that the middle-aged journeyman is often as great a sinner in this

Digitized by Google

respect as the apprentice. It sometimes happens that those placed in charge, through lack of shop training, are not able to see small defects or judge their imortance.

Notice the first thread on the screw shown at *A*, Fig. 90. This is the way many so-called lathe hands turn the job over to the bench hand to finish with a file.

After the thread has been cut to size, before removing the tool or work from the lathe, open the lead-screw nut, move the carriage by hand and chamfer as shown at *B*, leaving it finished as shown at *C*. This not only looks better but is better, and takes less time. The same method applies to the threading of a nut on the lathe. The above does not apply to harvesting machinery, but to tool work where accuracy usually is economy.

To have the lathe boss bring you a shaft like this, with the centers as shown at *D*, is exasperating. And on protesting at his not having them faced off, to have him tell the bench hand to file "em" off, because "Bill hasn't any cutaway centers for his lathe and can't face them out!" This can be done by backing the tailstock center a little, and they can then be faced off the end clear into the countersink without a cutaway center.

By looking at *E*, Fig. 90, it must be apparent to most any one that 55 degrees is about the proper angle to grind a facing tool. This gives ample strength and permits facing close to the center without interfering.

A DRILLING KINK

Any one who has ever drilled a hole in a lathe by holding the drill with a dog, and feeding it in to the work with the tail spindle, has probably had the drill catch just as it broke through the work, draw off the center, and possibly break the drill

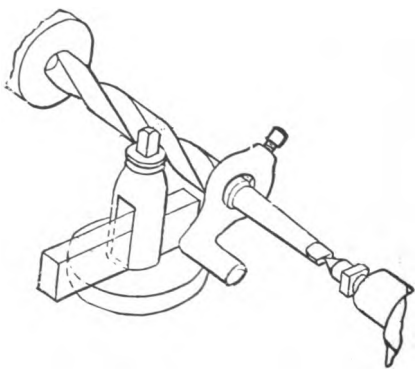

FIG. 91.—A good drilling kink.

Digitized by Google

To prevent this, especially in brass work, it is customary to grind the lips of the drill so that they have no top rake, or what corresponds to that in a lathe tool, but there is a better way, even without the use of a drill chuck of any kind.

Put a piece of steel or a lathe tool into the tail post, backward, as is often done, but, instead of letting the dog rest on the top of the tool, have it rest on the tool-holder and back up against the tool, as shown in Fig. 91. This pulls the carriage along as the drill is fed into the work, and it effectually prevents any dragging of the drill into the work with the damage that often goes with it.

THREE TYPES OF CENTERING MANDREL

Arbor work, or the use of mandrel in order to have the last turning operations come true with the hole previously bored, has changed somewhat in the last few years. Where a piece cannot be finished at one setting, as a blank for a change gear or similar work, it is customary to first bore the hole and face the hub. Then, in the old days, it would have been forced onto a mandrel which was made a very slight taper, from 0.001 to 0.002 inch per inch of length; the mandrel driven between the lathe centers and the work turned off. If the mandrel is true the piece will then be finished square and true with the hole.

All who have done this know of the occasional slipping of the piece through the cut being too heavy or the mandrel a trifle too small. They also know of the old way of enlarging the mandrel by prick-punching it to raise burrs all over it. If the work is not particular, it can be driven on over the burrs and will hold, though it will not be quite true. Or it can be ground after prick punching and trued up again.

The solid mandrels took tons of steel and iron as each was good for only one size, and the expansion arbor came to be common on account of the saving in stock and the fact that you could vary them within reasonable limits to fit any size.

When the hole is small in comparison with the outside diameter it is often difficult to drive work in this way and the work slipping or the mandrel bending are common occurrences. For this reason, as well as to facilitate the handling of work, the centering instead of the driving mandrel has come into use. Forcing a mandrel into the work takes time and this is avoided in the newer method. This means that the mandrel merely centers the work but does not drive it as shown in *A*, Fig. 92.

In such cases the mandrel might be called a stud or pin and is carried in the lathe spindle, projecting just far enough to carry the work,

Digitized by Google

but usually not projecting through the hub. The piece is usually first chucked and bored and the face turned off at the same setting. Then, after the pieces are all bored, the centering mandrel is put in place, the face plate and stud screwed on and the lathe is ready.

If the mandrel runs true and the face plate is square, it is very evident that the work will run true with the hole. The blank is slipped on the mandrel so that the stud will come between the spokes or in the holes and drive the gear. Then a cap of center plug, as shown, is slipped

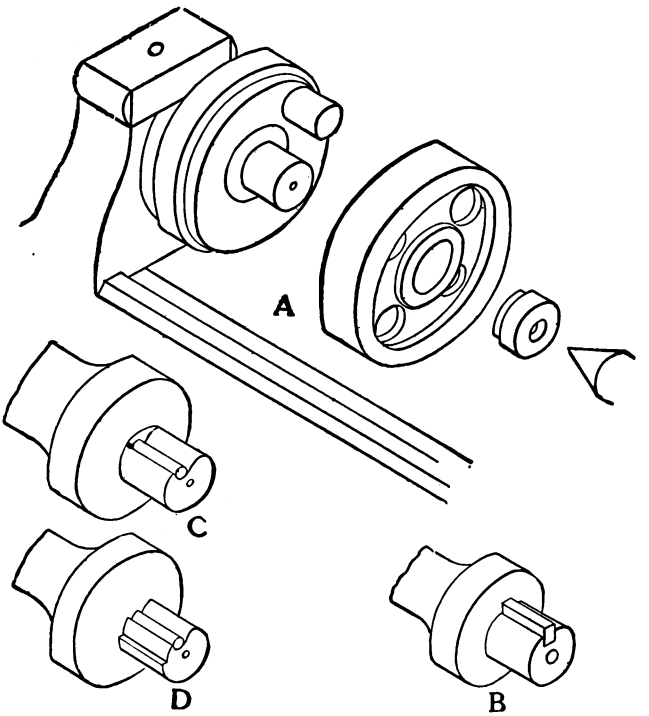

FIG. 92.—Centering arbors.

into the outer end of the bore to hold the work square and keep it in place, this being removed when the outer hub is squared. Or the hub is squared first and then the plug put into place. This is not necessary in all cases as the pressure of the facing tool will tend to keep the work against the face plate on cast-iron work. On steel castings or metal that rolls up a chip there is more danger of the work being pulled off the mandrel and something must be done to prevent it.

In some shops the centering arbor is fitted with a key, *B*, and the work is driven in this way. This necessitates key-seating or splining the

Digitized by Google

work after boring, but in a shop with a key-seater this is easily and quickly done. It is, of course, not advisable to use this method with work that is large as compared with the hole, it being always better to drive the work as far from the center as possible. This plan is used whether the work needs to be key-seated or not, for, as a rule, the key-seat does no harm whether it is needed or not.

In work where the key-seat is objectionable or where there is no key-seater handy, the device shown in *C* is sometimes used. The mandrel fits and centers the work as before, but as the tool tries to turn the work on the arbor, the roller tends to roll up the incline, as in a roller ratchet, and holds the work from turning. There is always the tendency to crowd the work off center with this device, much more so than where the key is used, and may be objectionable on this account in very accurate work.

This is modified in some cases by making the work bear only on the lower half of the arbor as in *D*, and cutting away the upper half, allowing the roller to bite as before, so that it draws the bore of the work up against the mandrel. In this way the bearing part of the mandrel can be exactly to size instead of having a slight allowance for the work being slipped on.

In all of these the object is to hold the work accurately and securely, to drive it steadily and allow it to be put on and taken off easily and quickly.

With the mandrel best adapted for the work in hand, and face plates that allow the work to be held and driven, yet faced down on the back side, a large variety of duplicate work can be done on the engine lathe at a low cost, much lower than is usually considered possible. A fork tool can go down each side of the rim and face it to size, while a regular tool turns the outside diameter. Suitable stops allow the tools to be moved to the same place every time and in this way do away with much measuring, as they will all be alike except for the wear of tools.

CARE OF THE LATHE

Lathes and other shop tools deserve more care than they usually receive. This does not mean that it is necessary to polish every part of the lathe, and scour it all bright with emery cloth or other abrasive. In fact these should be used sparingly. If the lathe has been allowed to get "gummy" from the oil not being wiped off, use a little kerosene or benzine in preference to emery, and in very few cases should it be used on the ways; never if it can be avoided.

When you see a lathe with the ways dented and scored and other

Digitized by Google

parts in a similar condition, it is safe to say the man in charge is not a high-grade machinist. Even if he is not responsible for the condition, he will endeavor to remedy it as quickly as possible, even in his own time, if no other is allowed him. Character shows up just as strongly in the shop as elsewhere, and unless a man or boy thinks enough of the tools he uses to take decent care of them, and has enough interest to do this, it is pretty safe to say he will never be a first-class machinist. If it is the right kind of a shop the care of the tools will be noted by the man higher up, and it counts when a better job comes along.

A little oil and often is the best with lathes, and other machinery. The spindle bearings should be tight enough to prevent lifting or jumping, and require oil to prevent heating and cutting. Lathes with cast-iron bearings must be watched closely. Cast iron makes a fine bearing after it gets glazed, but it must not be allowed to run dry. Some careful machinists fill the top of the oil pipe (or bottom of the oil cup if there is one) with clean waste, to keep dust and chips from being washed down to the bearing with the oil.

Keeping the ways lubricated is not easy, as the angle lets the oil run down, and it also attracts dust and dirt for the carriage to run over. The plan adapted by some of the best shops is to wipe the ways clean each morning, put on a few drops of oil, and run the carriage from one end to the other, so as to work the oil under it. Any surplus is wiped off to prevent its running down and gumming.

The various bearings on the apron of the carriage should all have their little drop of oil, through the hole provided in the front of the apron. The back gears, the bearings of the feed rod, and the lead screw all deserve a little attention, as well as the screws and bearings of the cross-feeds and the tailstock. The dead center also needs a drop of oil occasionally, especially on heavy work. To assist in this, heavy centers are often provided with an oil groove on top for feeding the oil to the bearing. Some prefer to cut an oil groove in the center of the work itself, so that it will carry the oil around with it, but this is not usually considered advisable.

KEEP THE LATHE-BED CLEAR

The piling of work, of tools and other things on the lathe-bed and on the carriage is not a good plan. It marks up the bed, gets in the way of the carriage at times, and is usually more of a habit than a necessity. While it is not a criminal offense, the habit should not be encouraged.

When it is necessary to have work or special tools around they can usually be kept on the tool board at the foot of the bed. This tool board should have the sides raised enough to prevent the tools from

Digitized by Google

falling or being pushed off, and it can be double-decked if more room is needed. A common design is shown in Fig. 93 and can be modified to suit conditions and needs. Two strips underneath, to fit the inside of the ways, prevent its being accidentally pushed off the end.

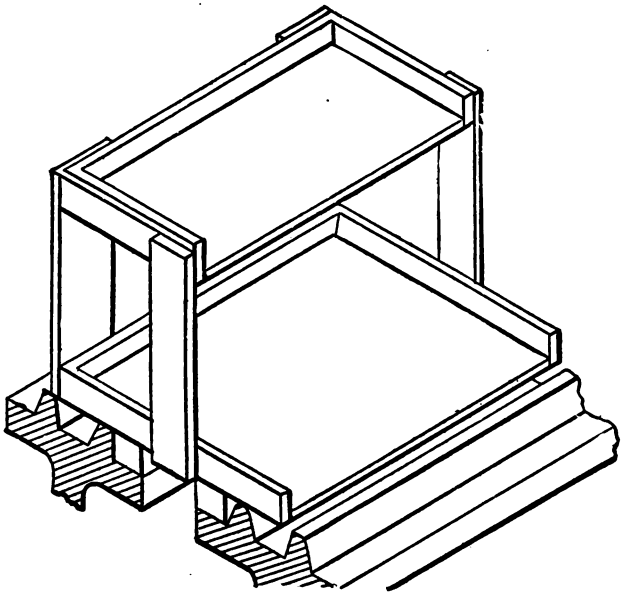

FIG. 93.—A double-decked tool board.

CARE OF THE SPINDLE

The center holes in the lathe spindles require especially good care, as the center will be thrown out of true if anything, even a thread of waste, is left in the hole or on the center hole. Even the "fuzz" from waste affects it on fine work, and for this reason some of the best mechanics use a small brush or cloth instead of waste, for this purpose. When it is not being used, it is a good plan to insert a cork or a blank center to prevent dirt from entering.

The threads on the nose of the spindle should also be well cared for. One trouble that arises is the "crossing" of threads in putting on chucks and face plates. This can be avoided by being sure that the chuck or face plate is held square with the spindle when putting it on. When no chuck or face plate is on the spindle, some protect the nose by screwing on a cap or slipping one of sheet metal over it.

The centers themselves also demand good treatment if first-class work is to be done. They must not be dropped or used for hammers or center punches.

Digitized by Google

Overhang of any part is always bad, though it cannot always be avoided. The lathe tool, the tail spindle, and the compound rest are all to be watched in this respect.

A COMMON FAILING

Perhaps the most common abuse of a lathe or its parts is the practice of using the tool-post wrench for a hammer to force the lathe tool into position. Even men who are careful of the working parts of a lathe will do this at times, and it may be a trifle finicky to object to it. But it is just as well to avoid it before the habit is too firmly fixed.

The weekly cleaning of lathes, usually the last half or quarter-hour on Saturday, is a good thing in many ways for most shops. In some cases it may pay to have special men to clean them after hours, but the mechanic is better fitted for this than a laborer unless the latter is especially trained for the work. The cleaning process, however, should not be turned into a scouring match, as sometimes happens. A clean lathe doesn't necessarily dazzle your eyes, but has the gum and dirt carefully wiped off.

Digitized by Google

SECTION II

DRILLS AND DRILLING

CHAPTER I

DRILLS

The drilling machine, or drill press as it was formerly called, is probably the most used machine tool, not even excepting the lathe. And yet it is only recently that sufficient attention has been given to it. The regulation vertical machine is shown in Fig. 1, and a radial machine in Fig. 2. But there are now so many modifications as to make it impossible to illustrate them all. They vary from the small, sensitive drilling machine for fine work, running up to 10,000 and 12,000 r.p.m., to the heavy-duty machines which can handle a 3-inch drill at an astonishing rate of speed. In between come the special machines with multiple spindles of varying numbers, some of them drilling from four or more directions. These have been developed largely for the automobile factories.

The machines themselves require attention as do all other machines. The drills which are used, however, require special attention to secure the best results. Twist drills, which are commonly used, stand more stresses in proportion to their size and weight than any other tool. When they give trouble it is safe to assume that some of the conditions are wrong. If a drill is ground correctly the sides of the hole help to support the drill and prevent breakage. When, however, the lips are not correctly ground the hole will be larger than the drill and this takes away the support. Figs. 3 to 6 show the effect of grinding the lips in different ways.

With the lips of different lengths, even though the angles are the same, the drill cuts large as shown in Fig. 3. This also happens when the lengths and angles are both different, as in Fig. 5. Different angles alone cause uneven cutting, as in Fig. 4, but may not increase the size of the hole.

Digitized by Google

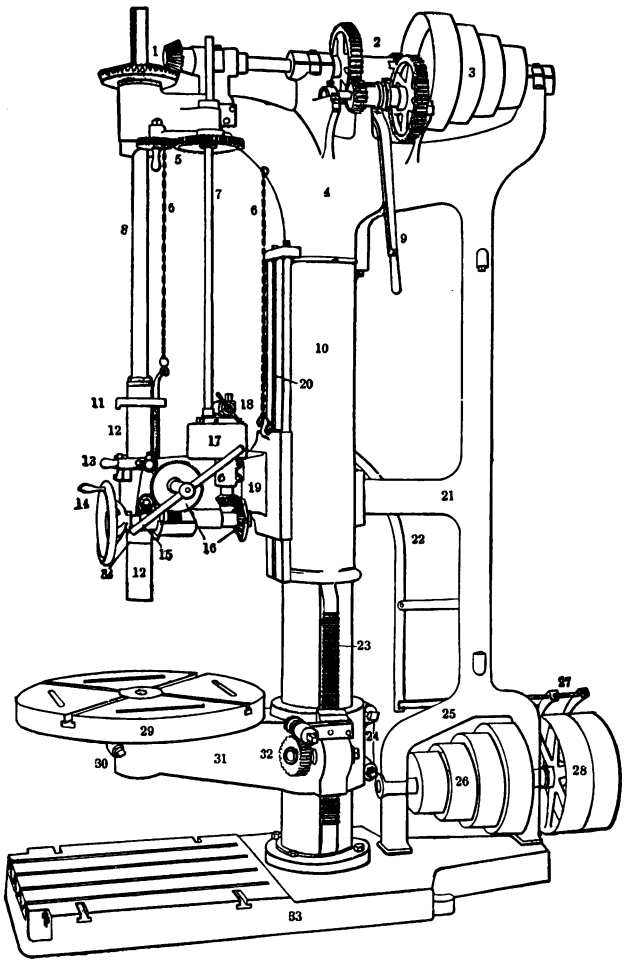

FIG. 1.—Drill press.

Drill Press—Parts of

1. Main driving gears, bevel.
2. Back gears.
3. Upper cone pulley.
4. Yoke to frame.
5. Feed gears.
6. Counterweight chains.
7. Feed shaft.
8. Spindle.
9. Back-gear lever.
10. Column.
11. Automatic stop.
12. Spindle sleeve.
13. Feed-trip lever.
14. Hand-feed wheel.
15. Quick-return lever.
16. Feed gearing.
17. Feed box.
18. Feed-change handle.
19. Sliding head.
20. Face of column.
21. Back brace.
22. Belt shifter.
23. Rack for elevating table.
24. Table-arm clamping screws.
25. Pulley stand.
26. Lower cone pulley.
27. Belt-shifting fingers.
28. Tight and loose pulleys.
29. Table.
30. Table-clamp screw.
31. Table arm.
32. Table-adjusting gear.
33. Base.
34. Ball-thrust bearing.

Digitized by Google

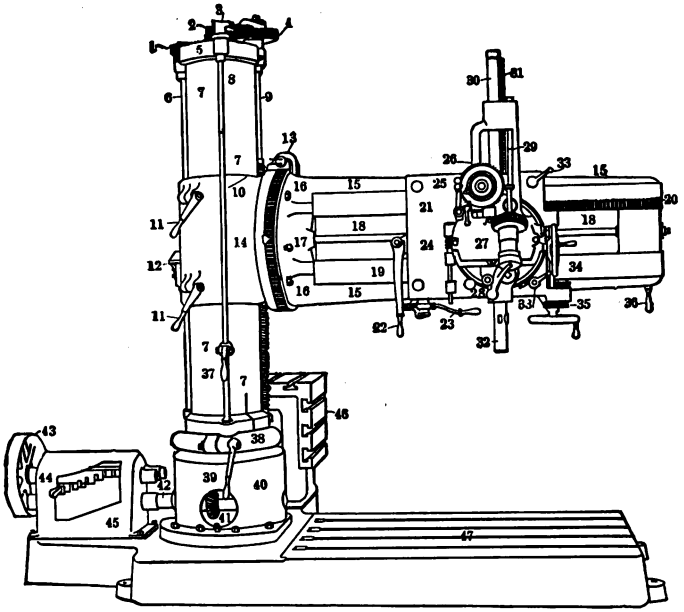

FIG. 2.—Radial drill—full universal.

Drill, Radial—Parts of

1. Vertical driving-shaft gear.
2. Center driving-shaft gear.
3. Elevating tumble-plate segment.
4. Elevating-screw gear.
5. Column cap.
6. Vertical driving shaft.
7. Column sleeve.
8. Elevating-lever shaft.
9. Elevating screw.
10. Arm girdle.
11. Arm-binder handle.
12. Arm-miter gear guard.
13. Arm-worm box.
14. Arm pointer.
15. Full universal arm.
16. Arm-clamping nuts.
17. Arm-dowel pin.
18. Arm shaft.
19. Arm ways.
20. Arm rack.
21. Saddle.
22. Reversing lever.
23. Back-gear lever.
24. Head-swiveling worm.
25. Feed-trip lever.
26. Index gear.
27. Universal head.
28. Quick-return lever.
29. Feed-rack worm shaft.
30. Spindle sleeve.
31. Feed rack.
32. Spindle.
33. Saddle-binding lever.
34. Feed hand wheel.
35. Head-moving gear.
36. Arm-swinging handle.
37. Elevating lever.
38. Clamping ring.
39. Clamping-ring handle.
40. Column.
41. Column driving-miters.
42. Driving-shaft coupling.
43. Driving pulley.
44. Speed-change lever.
45. Speed-box case.
46. Box table.
47. Base.

Digitized by Google

For drills larger than 3/8 inch, machine grinding is most economical and is also used on smaller drills in many shops. Hand grinding, however, is largely used on small drills. When grinding carbon drills plenty of water should be used to prevent heating and drawing the temper. The drill should not be held in one position on the wheel for too long as it prevents proper cooling. High-speed drills are ground successfully both wet and dry—each has its advocates.

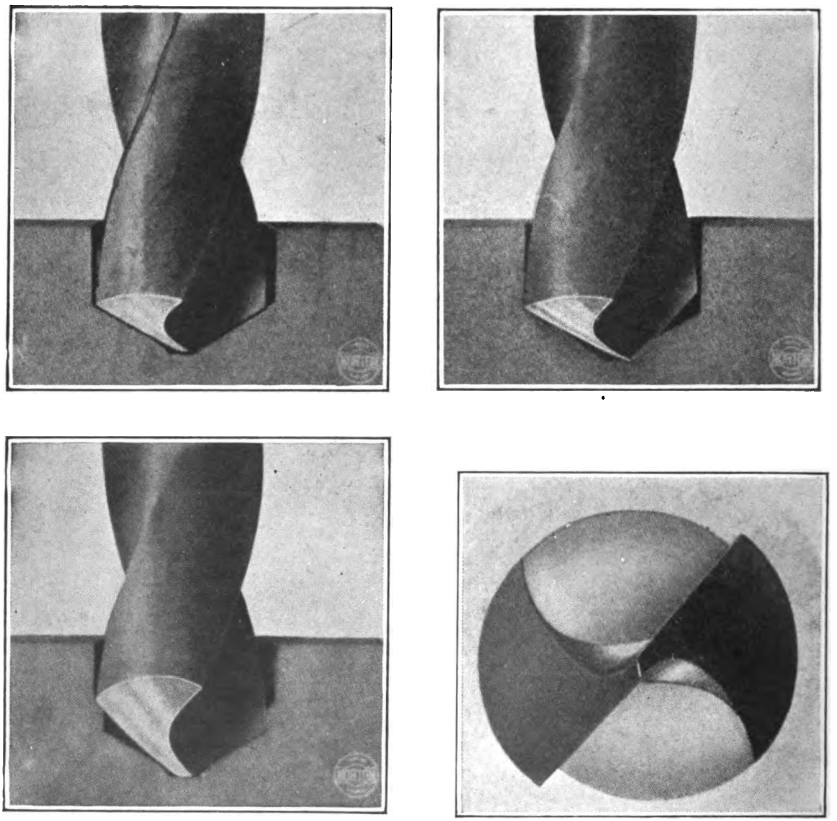

FIGS. 3–6.—Action of different drill points.

The lips should be equal in length and angle, with sufficient lip clearance, but not too much back of cutting edge. The proper clearance gives an angle of about 45 degrees at the point, as shown in Fig. 6. The angle of the clearance should be about 12 degrees, and with soft metals this can be increased to 15 degrees as in Fig. 7. The cutting angle generally used is 59 degrees each side of the center line, as shown in Fig. 8. Fig. 9 shows a method of seeing if both lips are ground alike. For cut-

Digitized by Google

ting brass or for thin stock, it is well to grind the cutting edge parallel with the axis of the drill, as in Fig. 10. This takes off the top rake of the cutting edge and prevents the tendency to draw into or through the work.

The web, or central portion of the drill, can hardly be ground so as to give a cutting action. The point shown in Fig. 6 has been thinned by grinding on each side to reduce the non-cutting portion as much as possible. This must be done carefully, and not too much, or the point will crumble under a heavy feed. The thinning should be done with a

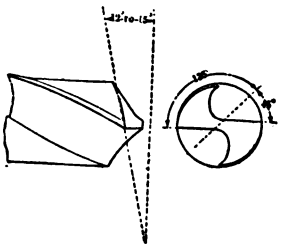

FIG. 7

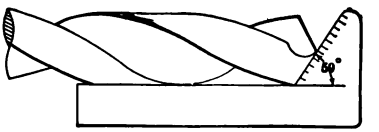

FIG. 8

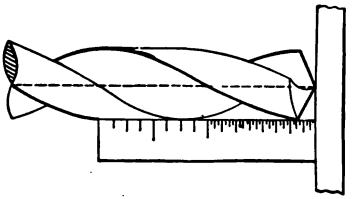

FIG. 9

FIG. 10

FIGS. 7–10.—Grinding twist drills.

narrow, round face wheel and the drill held so that the grinding commences on the curved portion of the plate. This is a delicate operation on small drills, but is a great help to their cutting qualities.

WHEELS FOR DRILL GRINDING

Wheels for drill grinding should be fairly soft and open so that they will not clog nor burn. The operation speed should be from 4500 to 5500 surface feet. To avoid burning when grinding dry, bear very lightly against the wheel. Watch carefully the surface from which the wheel leaves the drill in order to detect whether or not the temper has been drawn. Many times the operator is positive that he is not drawing the temper of high-speed steel because he cannot detect any changes in color, but this is because he is not looking at the surface which the wheel leaves.

Wheels about No. 46 and K, L or M by the Norton method of grad-

Digitized by Google

ing, are recommended for the various drill-grinding machines. It sometimes happens that wheels which are perfectly satisfactory for carbon drills may be unsuited for high-speed dills, although in most cases they work well in both cases.

SPEED OF DRILLS

Drills run at their proper speed secure the most work with fewest grindings and breakages. The best practice is to use a speed that will

TABLE 1.—TABLE OF DRILL FEEDS

Diameter Drill	INCHES OF FEED PER MINUTE AT CUTTING SPEED OF								
	30 Feet—Steel			35 Feet—Iron			60 Feet—Brass		
	Rev. per Minute	Feed .004–.007		Rev. per Minute	.004–.007		Rev. per Minute	.004–.007 per Revolution	
1/16	1834	7.33	12.83	2140	8.56	14.97	3668	14.66	25.76
1/8	917	3.66	6.41	1070	4.28	7.49	1834	7.33	12.83
3/16	611	2.44	4.27	713	2.85	4.99	1222	4.88	8.58
1/4	458	1.83	3.20	535	2.14	3.74	917	3.66	6.44
		Feed .007	.015		.007	.015		.007	.015
5/16	367	2.57	5.5	428	3	6.42	733	5.14	11
3/8	306	2.14	4.6	357	2.5	5.35	611	4.28	9.2
7/16	262	1.83	3.9	306	2.14	4.58	524	3.66	7.8
1/2	229	1.60	3.43	268	1.87	4.	459	3.20	6.86
9/16	184	1.28	2.75	214	1.50	3.21	367	2.57	5.5
3/4	153	1.07	2.3	178	1.25	2.67	306	2.14	4.6
7/8	131	.91	1.95	153	1.07	2.29	262	1.88	3.93
1	115	.80	1.71	134	.93	2	229	1.60	3.43
1 1/8	102	.71	1.53	119	.83	1.79	204	1.43	3.06
1 1/4	91.8	.64	1.37	107	.75	1.61	183	1.28	2.75
1 3/8	83.3	.58	1.25	97.2	.68	1.45	167	1.17	2.51
1 1/2	76.3	.53	1.15	89.2	.62	1.38	153	1.07	2.3
1 5/8	70.5	.49	1.05	82.2	.57	1.23	141	.99	2.11
1 3/4	65.5	.45	.97	76.4	.53	1.15	131	.94	1.96
1 7/8	61.1	.42	.92	71.3	.50	1.07	122	.85	1.81
2	57.3	.40	.85	66.9	.46	1.	115	.80	1.73
2 1/4	51	.36	.71	59.4	.41	.89	102	.71	1.53
2 1/2	45.8	.32	.68	53.5	.37	.80	91.7	.64	1.37
2 3/4	41.7	.29	.62	48.6	.34	.73	83.4	.58	1.21
3	38.2	.27	.57	44.6	.31	.67	76.4	.53	1.15

Digitized by Google

give 30 feet a minute cutting speed for steel, 35 feet for cast iron and 60 feet for brass. This means that the outer cutting edge must run fast enough to make these speeds. For drilling steel with a $^1/_{16}$-inch drill this gives 1834 revolutions a minute, while for brass it would be 3668 revolutions. The table gives the speeds without any figuring for all drills up to 3 inches. This is for carbon steel drills, which should have plenty of lubricant.

These speeds can be exceeded in many cases even with carbon drills, and can be doubled with high-speed drills, in fact from 75 to 150 feet is not uncommon, with 200 feet a possibility under good conditions. With a sharp, small drill at high enough speed, it is difficult to break them unless in a deep hole or the feed is extremely rapid. A $^1/_{16}$-inch high-speed drill at 10,000 r.p.m. will last a remarkably long time. The feeds in the table below can also be doubled in many cases.

FEED OF DRILLS

The feed of drills is usually given in parts of an inch per revolution, 0.004 to 0.007 inch for drills of ¼ inch and smaller and 0.007 to 0.015 inch for larger drills being recommended. This has been worked out into a table for the standard speeds to show inches of feed per minute for the three speeds given, which is more convenient. This is not an iron-clad rule but should be used with judgment. For high-speed steel these figures can be just about doubled.

TABLE 2.—DATA FOR DRILLING CAST IRON AT FEED OF 1″ PER MINUTE

Size of Drill	Feed per Revolution	Thrust in Pounds	H.P. for 1 Inch Feed per Minute	Size of Drill	Feed per Revolution	Thrust in Pounds	H.P. for 1 Inch Feed per Minute
1	0.02	1300	0.0035		0.06	8000	0.02
	0.04	2600	0.0063	2½	0.02	3200	0.008
	0.06	3900	0.010		0.04	6500	0.016
1½	0.02	2000	0.005		0.06	9700	0.024
	0.04	3900	0.010	3	0.02	3750	0.009
	0.06	5800	0.015		0.04	7700	0.019
2	0.02	2500	0.006		0.06	11500	0.029
	0.04	5300	0.013				

For carbon steel the values run from 1½ to 3 times these for cast iron, increasing with the feed per revolution.

Digitized by Google

TABLE 3.—DECIMAL EQUIVALENTS OF DRILL SIZES FROM 1/2" TO No. 80

Size	Decimal Equivalent	Size	Decimal Equivalent	Size	Decimal Equivalent
1/2	0.500	3	0.213	3/32	0.0937
31/64	0.4843	4	0.209	42	0.0935
15/32	0.4687	5	0.2055	43	0.089
29/64	0.4531	6	0.204	44	0.086
7/16	0.4375	13/64	0.2031	45	0.082
27/64	0.4218	7	0.201	46	0.081
Z	0.413	8	0.199	47	0.0785
13/32	0.4062	9	0.196	5/64	0.0781
Y	0.404	10	0.1935	48	0.076
X	0.397	11	0.191	49	0.073
25/64	0.3906	12	0.189	50	0.070
W	0.386	3/16	0.1875	51	0.067
V	0.377	13	0.185	52	0.0635
3/8	0.375	14	0.182	1/16	0.0625
U	0.368	15	0.180	53	0.0595
23/64	0.3593	16	0.177	54	0.055
T	0.358	17	0.173	55	0.052
S	0.348	11/64	0.1718	3/64	0.0468
11/32	0.3437	18	0.1695	56	0.0465
R	0.339	19	0.166	57	0.043
Q	0.332	20	0.161	58	0.042
21/64	0.3281	21	0.159	59	0.041
P	0.323	22	0.157	60	0.040
O	0.316	5/32	0.1562	61	0.039
5/16	0.3125	23	0.154	62	0.038
N	0.302	24	0.152	63	0.037
19/64	0.2968	25	0.1495	64	0.036
M	0.295	26	0.147	65	0.035
L	0.290	27	0.144	66	0.033
9/32	0.2812	9/64	0.1406	1/32	0.0312
K	0.281	28	0.1405	67	0.032
J	0.277	29	0.136	68	0.021
I	0.272	30	0.1285	69	0.029
H	0.266	1/8	0.125	70	0.028
17/64	0.2656	31	0.120	71	0.026
G	0.261	32	0.116	72	0.025
F	0.257	33	0.113	73	0.024
E-1/4	0.250	34	0.111	74	0.0225
D	0.246	35	0.110	75	0.021
C	0.242	7/64	0.1093	76	0.020
B	0.238	36	0.1065	77	0.018
15/64	0.2343	37	0.104	1/64	0.0156
A	0.234	38	0.1015	78	0.016
1	0.228	39	0.0995	79	0.0145
2	0.221	40	0.098	80	0.0135
7/32	0.2187	41	0 096		

Digitized by Google

One inch flat twisted drills have been run from 313 to 575 r.p.m., with feeds of 11.27 and 28.1 inches per minute and required from 5.22 to 11.60 actual horse power.

TAP DRILL SIZES FOR REGULAR THREADS

These sizes give an allowance above the bottom of thread on sizes $^3/_{16}$ to 2; varying respectively as follows: for "V" threads, 0.010 to .055 inch; for U. S. S. and Whitworth threads, .005 to .027 inch. These are found by adding to the size at bottom of thread, ¼ of the pitch for "V" threads, and ⅛ of the pitch for U. S. S. and Whitworth, the pitch being equal to 1 inch divided by the number of threads per inch. In practice it is better to use a larger drill if the exact size called for cannot be had.

TABLE 4.—TOP DRILL SIZES

Size of Tap, Inch	No. of Threads	SIZE OF DRILL			Size of Tap, Inch	No. Threads	SIZE OF DRILLS		
		U. S. S.	V	W			U. S. S.	V	W
3/16	24	0.138	0.111	0.129	15/16	9	0.808	0.790	0.810
1/4	20	0.191	0.184	0.192	1	8	0.854	0.832	0.856
5/16	18	0.238	0.239	0.239	1 1/16	8	0.917	0.894	0.919
3/8	16	0.302	0.293	0.303	1 1/8	7	0.957	0.932	0.960
7/16	14	0.354	0.345	0.355	1 1/4	7	1.082	0.057	1.085
1/2	13	0.409	0.399	0.410	1 3/8	6	1.179	1.144	1.182
1/2	12	0.402	0.391	0.403	1 1/2	6	1.304	1.269	1.307
9/16	12	0.465	0.453	0.466	1 5/8	5½	1.412	1.372	1.416
5/8	11	0.518	0.056	0.520	1 5/8	5	1.390	1.347	1.394
11/16	11	0.581	0.568	0.583	1 3/4	5	1.515	1.472	1.519
3/4	10	0.632	0.618	0.634	1 7/8	5	1.640	1.597	1.644
13/16	10	0.695	0.680	0.697	1 7/8	4½	1.614	1.566	1.619
7/8	9	0.745	0.728	0.747	2	4½	1.739	1.691	1.744

A very simple rule, which is good enough in many cases, is:

Subtract the pitch of one thread from the diameter of the tap.

A ⅜-inch tap 16-thread would be ⅜ minus $^1/_{16}=^5/_{16}$ drill; a ¾-inch tap, ten-thread, would be ¾ minus $^1/_{10}=^{75}/_{100}-^{10}/_{100}$ or 0.75—0.10= $^{65}/_{100}$ or 0.65, or a little over ⅝ of an inch, so a ⅝-inch drill will do nicely. With a 1-inch tap we have 1—⅛=⅞-inch drill, which is a little large but leaves enough thread for most cases. If more thread is wanted, subtract less than one pitch from outside diameter.

Digitized by Google

TABLE 5.—TAP DRILLS FOR S. A. E. (A. L. A. M.) THREADS

Size of Tap	Threads per Inch	Size of Drill, Inches	Size of Tap	Threads per Inch	Size of Drill, Inches
1/4	28	7/32	3/4	16	43/64
5/16	24	17/64	7/8	14	49/64
3/8	24	27/64	1	14	57/64
7/16	20	29/64	1 1/8	12	1 1/64
1/2	20	7/16	1 1/4	12	1 9/64
9/16	18	1/2	1 3/8	12	1 17/64
5/8	18	33/64	1 1/2	12	1 25/64
11/16	16	37/64			

The tap should be between 0.002 and 0.003 inch large for clearance between top and bottom of threads.

Digitized by Google

CHAPTER II

DRILLING TOOLS

AN INEXPENSIVE COUNTERBORE

When the twist drill has served its original purpose and is ready for the scrap box, it can still be made a very efficient tool if even the shank and a small part of the flute are left. By annealing the stub and drilling and reaming a taper hole for an inserted pilot, and also drilling a

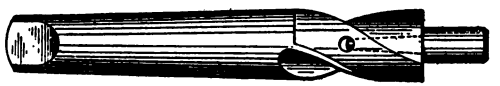

FIG. 11.—An easily made counterbore.

small cross-hole for removing the pilot, then rehardening, it becomes a very efficient tool, as shown in Fig. 11. There are plenty of scrap drills around the majority of small shops but a scarcity of counterbores and facing tools.

MAKING SMALL DRILLS FOR WATCHES

It is often necessary to drill a large number of small holes in metal disks used for watches and instruments. It is not possible to obtain the correct size of the drills and it is rather difficult and expensive to

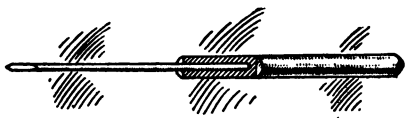

FIG. 12.—Holder for small drills.

make many small accurate drills satisfactorily. The main difficulty is to replace them without getting slight differences in the diameter.

A good solution of this problem is shown in the illustration. Take a needle and temper it, then break both ends of the needle off and grind it on a fine emery wheel or oil stone. Very thin needles should be soldered or driven into a piece of brass rod, to hold them more firmly in the chuck. Fig. 12 shows how this is done.

Digitized by Google

A CENTER DRILL CHUCK

A convenient spring collet, in which badly worn or broken lathe centers can be used to advantage, is shown in Fig. 13. It is not advisable to use hardened centers, as they would have to be annealed, machined and then re-hardened. If the collet is to be permanent, much time can be saved by choosing a soft center, drilling and slitting as shown, then hardening and grinding.

The collet shown is exceedingly convenient for all small drilling and centering operations and may be used in either the live spindle or the tailstock. As far as speed is concerned, it can be handled as easily as a regular spring collet with draw-in rod; for in using this device you simply choose a collet and drill of corresponding size, insert the drill, place the center in the spindle bore and drive it home by means of the small section of tubing and a soft hammer. The piece of tubing is placed

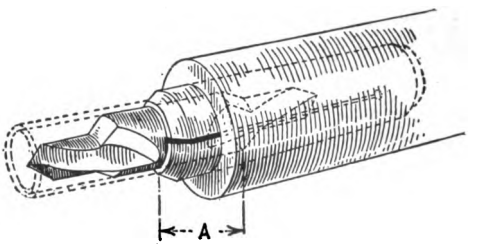

FIG. 13.—Collet chuck for center drills.

over the drill, as shown in the drawing. A light blow with a soft hammer, on the end of the tubing, secures both collet and drill, ready for service. The whole arrangement is removed just as is an ordinary center. The bearing upon the drill, reamer, etc., is also mechanically correct as shown at *A*.

The collet may be elaborated somewhat, to its advantage, but if too much work is to be expended upon it, it would be better to make a standard spring collet; for that reason the collet is shown here in its simplest form.

As to whether this form of collet will "hold," it will probably be sufficient to remind ourselves that large cutting centers are regularly held in the same way.

A SMALL SPOTTING TOOL

Fig. 14 shows a tool designed to take the place of a prick-punch in laying out accurate work. It is often desirable to limit variations of drilled holes to say 0.002 inch or so. In prick-punching intersecting lines

Digitized by Google

of a piece of work that has been laid out, the mark is seldom correct. With this little tool, which is light and sensitive, one can feel the cutting point strike first one line then the line intersecting. If held fairly vertical and pushed downward rapidly, the little flat drill at its end

FIG. 14.—A small spotting tool.

will cut a mark, not merely produce an indentation. Its correctness is easily determined with a magnifying glass. There will be no burr, nor a confusing rim of displaced metal to misguide the workman. The point is easily kept sharp with an oilstone.

Digitized by Google

CHAPTER III

A FEW DRILLING KINKS

METHOD USED WHEN DRILLING SMALL HOLES

The attachment Fig. 15 was designed to be fastened to the sleeve of a sensitive drill press. It is adjustable for different lengths of drills by the nuts *A* and is held to a collar *B*. The rod *C* was thinned at the

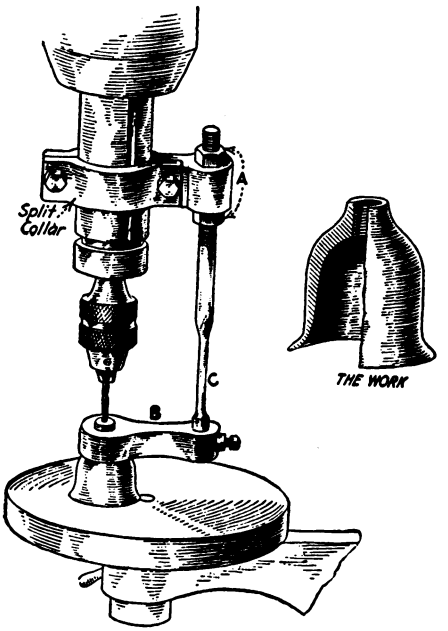

FIGS. 15–16.—Holding work from turning.

lower end to allow for spring. It was made of drill rod, hardened and tempered blue.

When first drilling the pieces it was found that there was sufficient friction against the machine table to prevent the work from turning until the drill was just breaking through. The device provided the necessary additional friction to hold the piece, and as it is always out of the way when changing the piece there is no delay.

Digitized by Google

The work Fig. 16 was simply pushed over the edge of the table into a box after being drilled. The same method of holding was used when tapping the pieces. The pieces were drilled with the tool revolving at 1100 r.p.m. at the rate of approximately 700 per hour. The tap revolved at 550 r.p.m. and the production was 1000 per hour.

SIMPLE WAY OF OILING DRILLS

A number of flat strips of ¼-inch thick steel required the drilling of a number of $^3/_{16}$-inch holes. The operator started on the work feeding down the drill and occasionally placing oil with a stick on the tool to

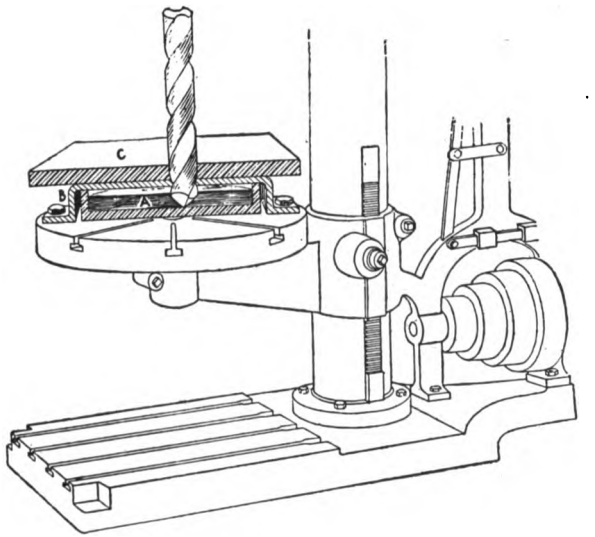

FIG. 17.—Keeping oil on a drill point.

assist in cutting and keeping the tool cool. After a time the man got tired of stopping the drilling operation to apply the oil and solved the problem in the following simple manner:

Taking an empty tin *A*, Fig. 17, he filled it with oil and fastened it to the machine table with a narrow iron strip or clamp *B*. Through this clamp he previously drilled a hole slightly larger than the size of drill. The steel *C* to be drilled was then fed over the clamp, and as the holes were drilled the tool was allowed to pass through into the oil. When the drill was drawn up with the machine a quantity of oil, sufficient to lubricate the tool for drilling, was carried up the flutes.

Chips that gathered in the box were occasionally removed from the side and the supply of oil was renewed as required. This simple contrivance materially increased the man's output.

Digitized by Google

Nothing looks worse in a shop than to see the tables of drilling machines all marked up with drill holes where the point of the drill

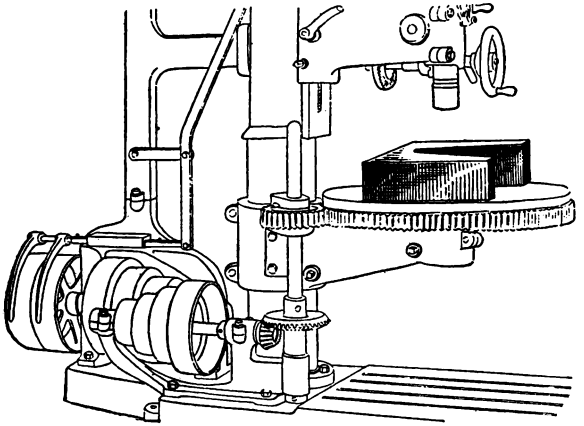

FIG. 18.—Saving the Drill Table.

has been allowed to go through the work and into the table. The V block shown in Fig. 18 will be found very convenient in preventing this.

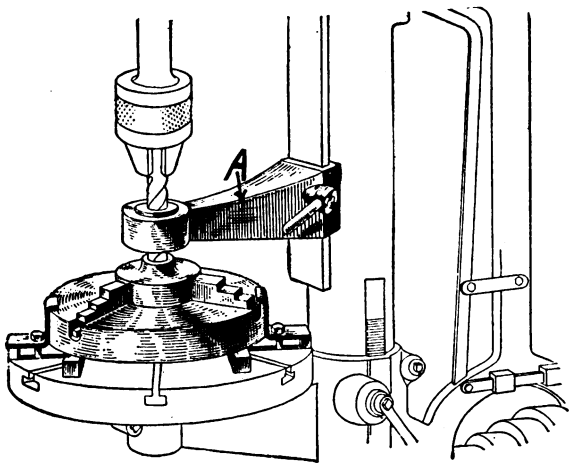

FIG. 19.—An adjustable universal centering jig.

Sometimes rings of convenient size are placed under the work for the same purpose.

Figs. 19 and 20 show two ways of guiding drills without special jigs for each piece. In Fig. 19 the arm *A*, which clamps to the slide

Digitized by Google

on the column, carries drill bushings which can be readily changed for different sized drills. This requires the piece to be properly located in a chuck or other device.

A different method is shown in Fig. 20 where the arm *A* centers

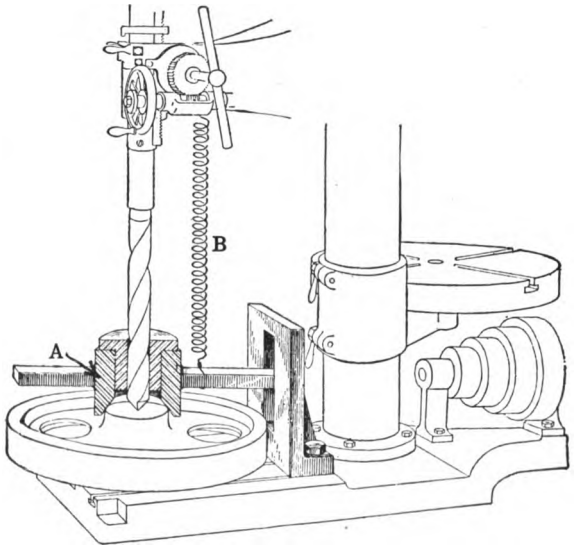

FIG. 20.—Making the drill itself locate the work.

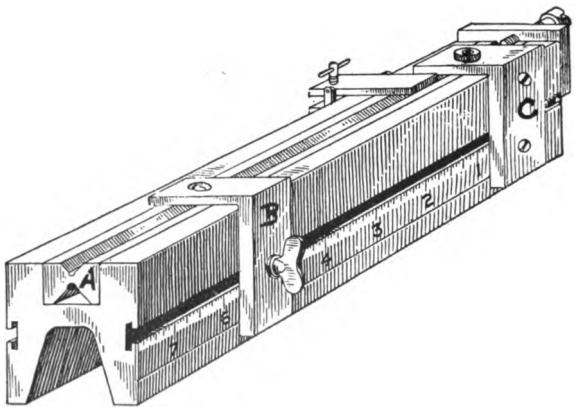

FIG. 21.—One jig that replaced several hundred.

the work by means of the coned surface shown. These can be made separate from the arm and of different sizes or the whole arm can be changed very easily. The spring *B* helps to raise the arm out of the

Digitized by Google

way of the work. It is held down in contact until the drill has fairly entered the work.

The simple drill jig shown in Fig. 21 replaced a very large number of individual jigs for drilling cotter pin holes in small shafts, from $^3/_{16}$

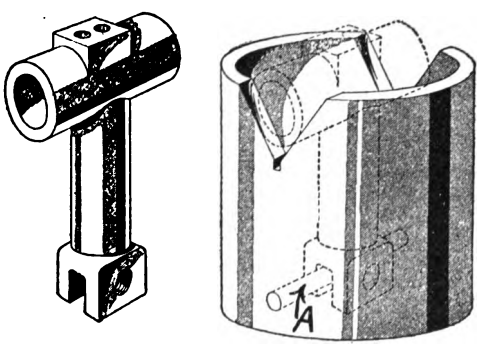

FIG. 22.—Convenient V-blocks are sometimes made from round pipe.

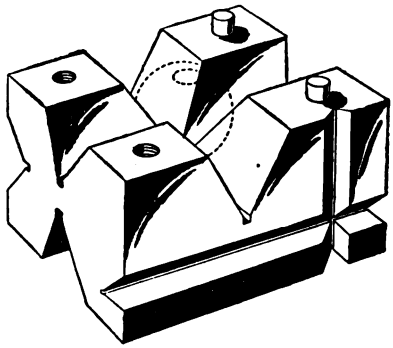

FIG. 23.—This universal V-block will hold round stock and spheres.

inch to 1 inch in diameter. It will be noted that the V block *A* has two sizes of V's, so that it can be used either side up. Standard slip bushings are used in the angles *B* and *C*.

The illustration shows clearly how the jig is quickly adjustable to

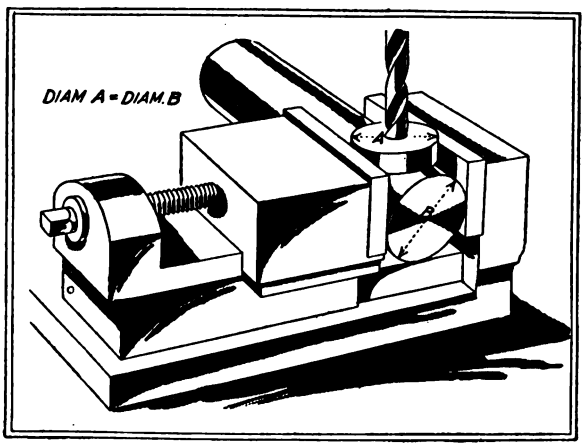

FIG. 24.—Drilling a hole in a shaft.

any shaft within its range and to any distance between centers of the holes to be drilled. Particular attention is called to the scale embedded in one side of the jig. The scale is so placed that the right-hand edge of the movable bracket indicates the distance between centers of the drill

Digitized by Google

bushings, thus eliminating any necessity of measuring or calipering when setting up for any particular job.

Two other forms of V blocks are shown in Figs. 22 and 23. The first is made from a piece of pipe, which can be modified to suit the work in hand. In the example shown, the cross bar *A* centers the lower end of the piece to be drilled and insures the holes being parallel with the shank.

Fig. 23 shows a block with V's on four sides and cross V's on two sides. These cross V's enable a ball or sphere to be firmly held for drilling and locates them always in the same place.

Another method is shown in Fig. 24 and explains itself.

Digitized by Google

CHAPTER IV

JOBBING WORK ON THE DRILLING MACHINE

CROWN-MILLING PULLEYS ON A DRILLING MACHINE

A rather unusual method of crowning pulleys is shown in Fig. 25. The special fixture is clamped to the table of an ordinary drilling ma-

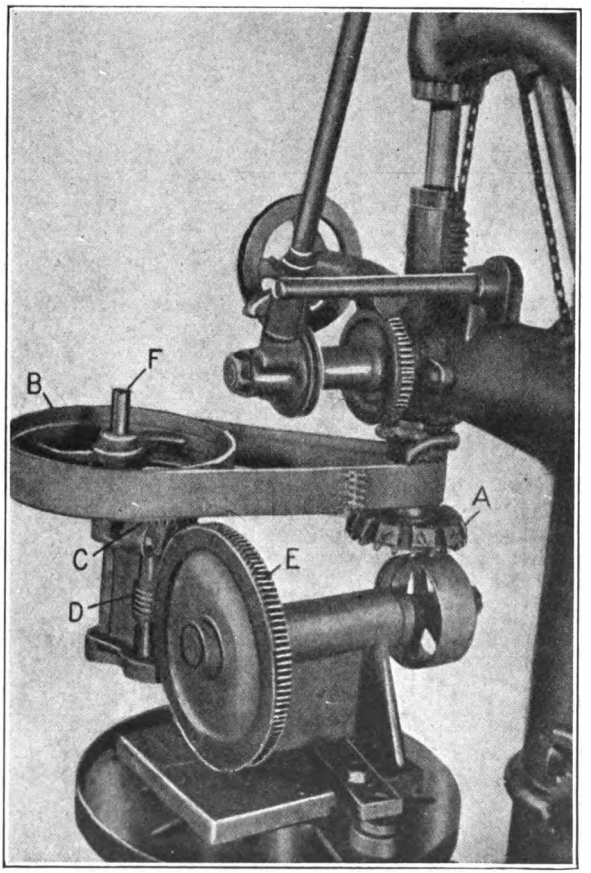

FIG. 25.—Milling crown pulleys on a drilling machine.

Digitized by Google

chine, and the machine itself is practically unchanged except for the placing of a small pulley over the lower end of the spindle to drive from.

The inserted-tooth milling center *A* is held in the spindle, which is made to run at the proper speed. As the spindle turns it runs the pulley *B* and, through a pair of spur gears at *C*, operates the worm and worm gear *D* and *E*. As the worm gear *E* is mounted on the same shaft with the pulley to be milled, the pulley is slowly turned as the milling cutter in the spindle surfaces it off. The pulley *B* may be set up or down on the shaft *F* by means of a setscrew in its hub, in order to accommodate different sizes of pulleys to be crowned.

This device is used in the shop of the F. W. Lindgren Co., Rockford, Ill., to machine the pulleys used on the small drilling machines made by them.

RECUTTING A STRIPPED THREAD IN AXLE HOUSING

A stripped thread in an automobile rear-axle construction, as shown at *A*, Fig. 26, was handled as follows: The bar *B* was made from a con-

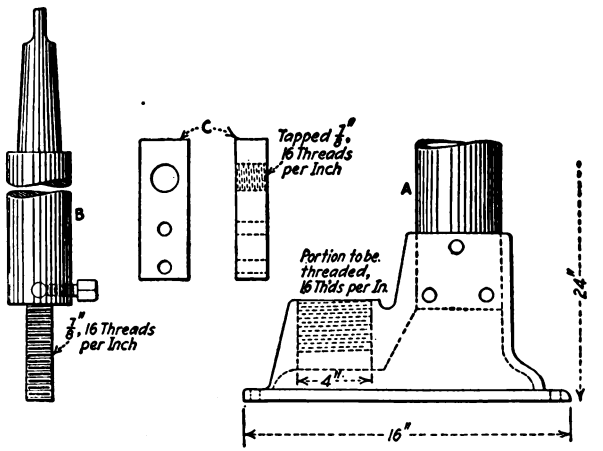

FIG. 26.—Recutting a stripped thread.

venient piece of cold-rolled turned to fit the drill-press spindle and threaded with the desired number of threads on the lower end. A round hole and setscrew held the tool in place.

A scrap of bar stock *C* was faced and tapped at one end to fit the threaded portion of *B*. Two bolt holes were drilled and the piece clamped on the table of the drill press, with the threaded hole in the center. With the housing in place over *C*, the bar was inserted and the work trued with the bar; then the feed was thrown out, leaving the spindle free to follow the screw on the bar *B*.

Digitized by Google

Using a broad tool, the hole was bored, after which the threads were cut and polished by running the tool up and down several times without changing the setting. While this is not a new kink, it will often be found useful.

REBORING A SPINDLE IN PLACE

On a vertical drilling machine the bore commenced to run out of true. It meant much work to dismount the spindle and bore in the

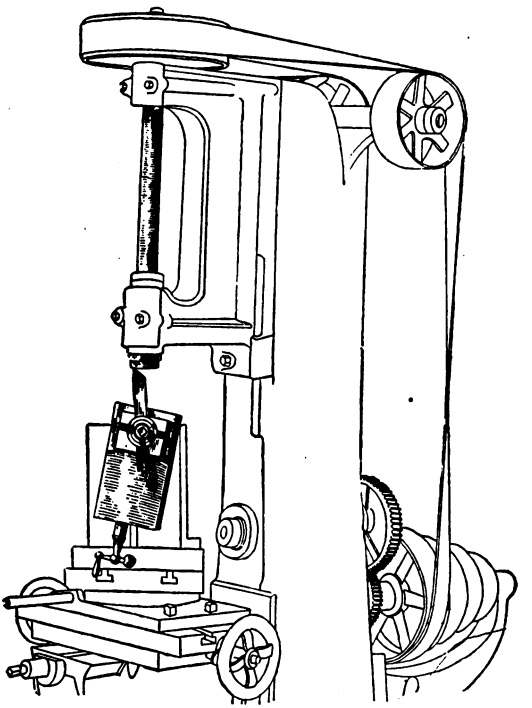

FIG. 27.—Reboring a spindle.

ordinary manner, so the job was done as shown in the illustration. Clamping a lathe tool post on an angle-plate, the spindle was rebored, as shown in Fig. 27.

A RAILROAD SHOP KINK

In Fig. 28 is illustrated a brass locomotive-hub liner to be drilled and countersunk, as shown at one of the end holes. The various operations for producing this work in quantities are as follows: First, the liners are brought to the bench, and the location of each hole is center-punched through a plate jig. A very heavy punch mark will enable

Digitized by Google

the hole to be drilled close enough. After being center-punched the liners are taken to the drilling machine, in the table of which the three holes *A*, *B* and *C* have been drilled.

The rig *D* is merely a leaf jig, so to speak, and is made up of a leaf and a drilled block secured to the drill-press table by a ¾-inch bolt. A stop pin is provided, as shown. The distance between the under side of the leaf and the table is about $^1/_{32}$ inch greater than the thickness of the liner, to allow for possible burrs, etc.

One end of the liner is slipped under the leaf, the ¾-inch drill is

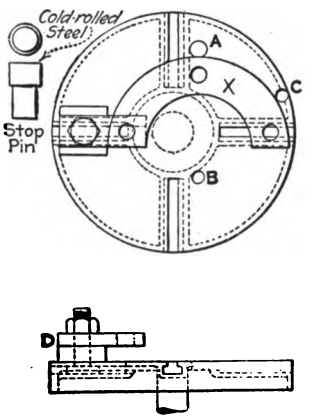

FIG. 28.—Drilling hub liner.

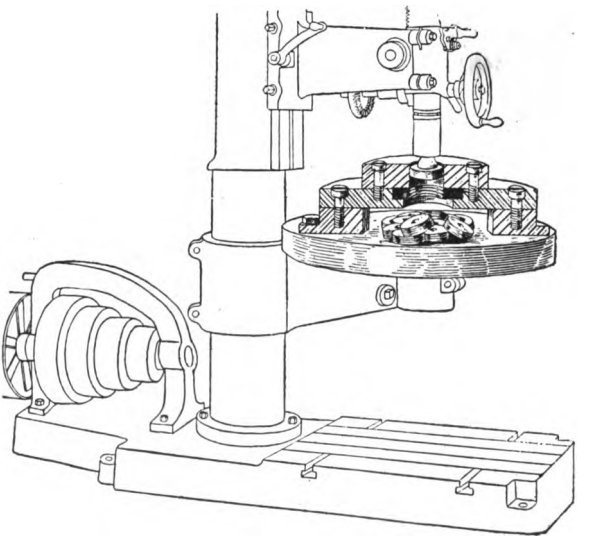

FIG. 29.—Threading plugs.

brought down into the punch mark and the first hole drilled, the stop pin being placed in the hole *A*. All the liners are so drilled at this setting. Then the stop pin is placed in the hole *B*, and the center hole in all the liners is drilled. Last, the stop pin is placed in hole *C*, and the last hole is drilled in all the liners. The stop pin, as its name indicates, is merely a stop. The leaf is to prevent the liner from breaking the drill by running up on it under the excessively heavy feed.

MANUFACTURING ON THE DRILLING MACHINE

A simple, yet practical job of manufacturing on a drilling machine is shown in Fig. 29, where plugs are being threaded by driving them through a die as shown. The plugs have square holes or recesses for screwing them into place and these squares are used for driving them

Digitized by Google

through the die. Opening at the sides of the framework allows them to be pushed out of the way.

A much more complete manufacturing equipment is shown in Figs. 30 to 35, inclusive.

MACHINING CONE PULLEYS ON A DRILLING MACHINE

On the drilling machines made by F. W. Lindgren Co., Rockford, Ill., the cone pulleys are machined all over, most of this work being done in a drilling machine fitted with special chuck and tools.

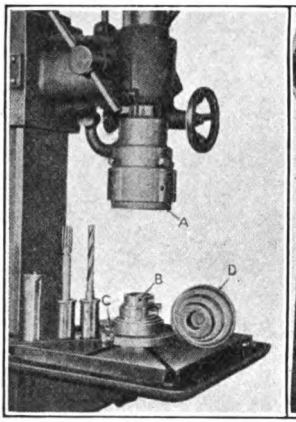

FIG. 30

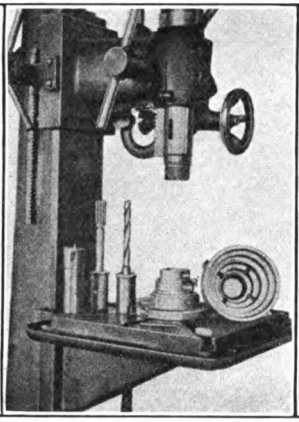

FIG. 31

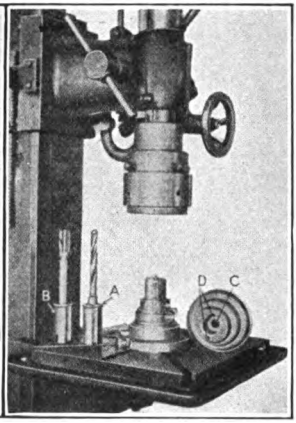

FIG. 32

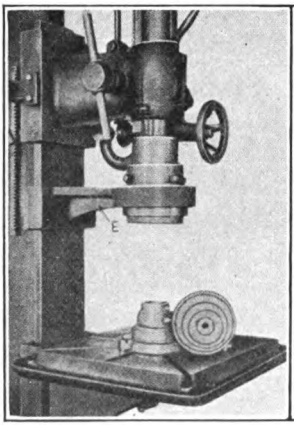

FIG. 33

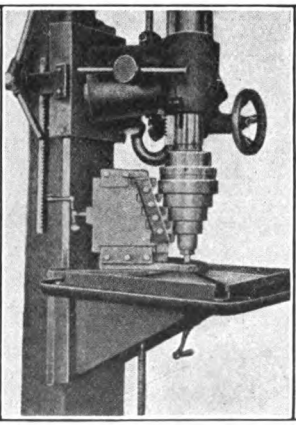

FIG. 34

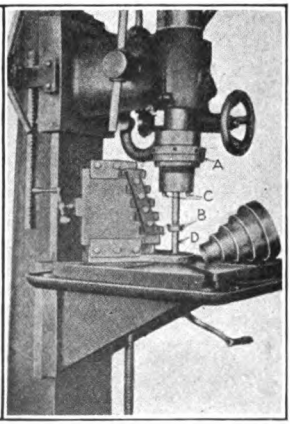

FIG. 35

FIGS. 30–35.—Machining cone pulley on a drilling machine.

The tools for machining the inside of the pulleys are illustrated in Fig. 30. The pulleys are in five steps, 1⅜ inches wide, the smallest step

Digitized by Google

being 2 inches in diameter. The pulley to be machined is placed in the spindle chuck, as at *A*, and held in by setscrews. It is then brought down over the cone tool, and the cutters at *B* and *C* machine the inside of the steps, the outside of the center and partly clean up the small end, leaving the inside as at *D*.

The chuck to hold the cone is removed in Fig. 31, in order to show the inside. The place where the small step of the cone goes in is taper-bored, so as to act like a self-centering device. The rest of the cone is centered so as to run approximately true by means of the two sets of setscrews conveniently located for tightening and releasing.

After the inside has been machined out, a center drill is placed in

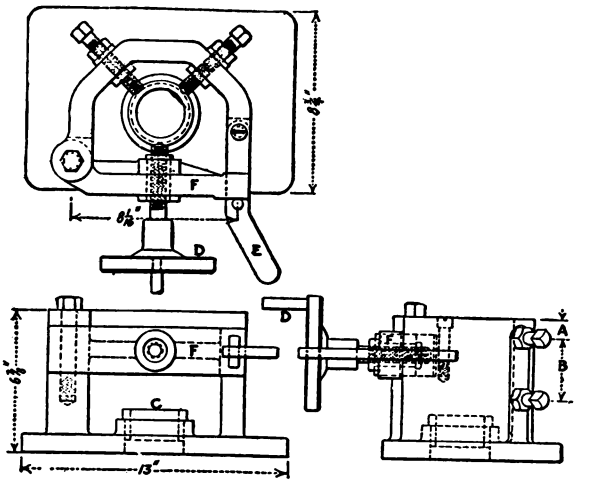

FIG. 36.—Fixture for boring bushings.

the tool block, Fig. 32. As can be seen, the center drill is held in a holder having a keyway on one side. The holder fits in the bore of the tool block, over a key that keeps it from turning. This tool not only carries a center drill, but also a tool for finishing the end of the pulley center. Next, the center-drill holder is removed, the twist-drill holder *A* is put in, and the center, or spindle, hole is drilled. This is followed by reamer *B*, leaving the work as at *C*. A simple jig is next used to drill two driver holes at *D*. In actual use, a steady-bracket *E*, Fig. 33, is used close down to the tool block, but this was omitted in the previous illustrations in order to show the parts better.

The outside of the cone is turned as in Fig. 34, which shows the cuts finished and the tools just being drawn back. The tools are fed by means of a ball crank. The cone is shown removed in Fig. 35. It

Digitized by Google

will be seen that the part *A* of the holding fixture is beveled so as to receive and center the large end of the cone. The pilot spindle fits the spindle hole of the cone, and the piece is held on by the nut *B*. The pulley is kept from slipping by means of the two driver pins *C*, which enter the two holes previously referred to. The lower end of the pilot *D* fits a bushing in the table bracket and steadies the work during the cut.

Other interesting examples of unusual work on drilling machines are shown in Figs. 36 to 39. These show just how rapid boring of rather difficult pieces was done on heavy type drilling machines.

RAPID BORING ON HEAVY DRILLING MACHINES

The fixture shown was designed to meet the requirements of one department in an automobile-axle plant having a number of different-

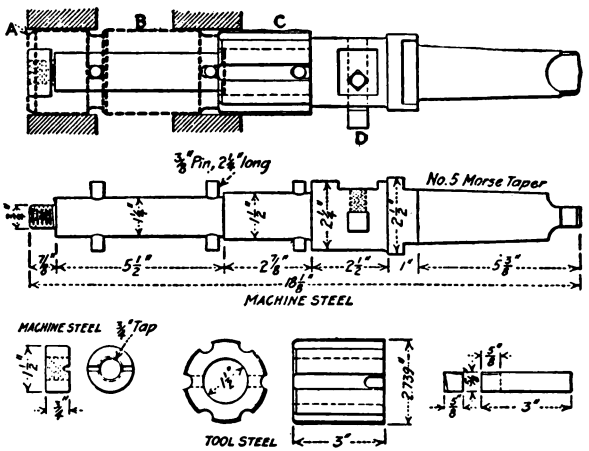

FIG. 37.—Reamer bar and cutters.

shaped castings to bore and face. These were formerly machined in screw machines, but this fixture enabled them to be bored and faced in a battery of four Baker drilling machines. One man operates the four machines at a saving in labor cost as well as floor space, which meant a great deal to this department.

As can be seen in Fig. 36, the fixture is an easy one to manufacture and the first cost is small. The bushing marked *C* will have a hole about $^1/_{16}$ inch larger than the hole in the casting to be bored. The height of the shoulder on this bushing depends on the length of the casting to be bored, as it is good practice to have the screw with handwheel *D* come in the center of the casting length. The dimensions *B* and *A* can be made to suit different lengths of work. It takes but ten seconds to

Digitized by Google

insert and remove castings. The leaf *F* is swung open, the casting inserted, and the leaf swung shut and locked with the lever *E*. Pressure is brought against the casting with the handwheel screw *D*.

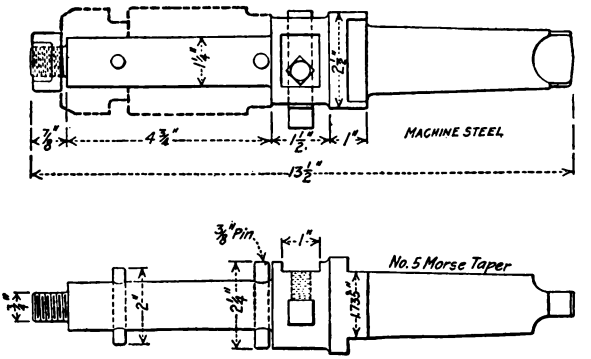

FIG. 38.—The boring bars.

The accompanying sketches show some of the irregular-shaped castings as well as straight work, the pieces being all of malleable iron. The boring bars are shown in Fig. 37, these also being very simple to make. A short roughing high-speed reamer having 6 flutes is shown at *A*.

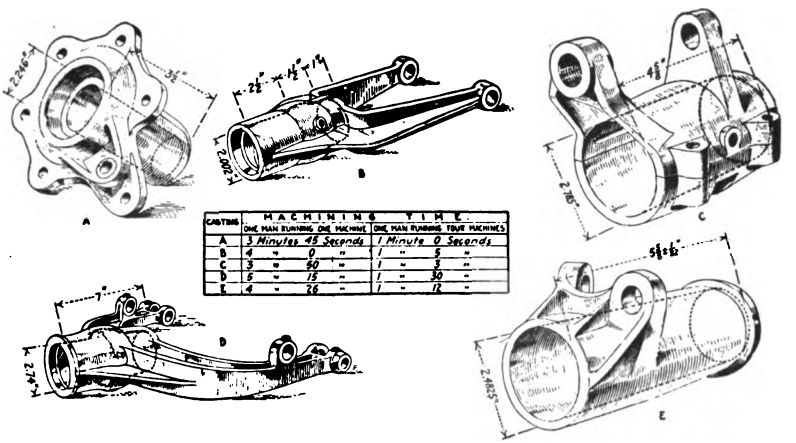

FIG. 39.—Some of the work done.

This is followed by a finishing high-speed 12-flute reamer as *B* to do the finishing. The pilot *C* follows the reamers to keep the hole straight where it is so much longer than the reamers. The facing tool *D* completes its work after the finishing reamer *B* goes through the hole.

A shorter bar is shown in Fig. 38. This is similar to Fig. 37 except-

Digitized by Google

ing for the pilot back of finish reamer. When only one machine is used, a feed of 4½ inches per minute can be maintained on the castings shown in Fig. 39. But when a battery of four machines is used, the feed will have to be set to accommodate the length of bore which governs the loading and unloading of each fixture.

The casting *A*, Fig. 39, was machined at the rate of 600 per 10 hours on four machines. Two roughing reamers and one finish reamer were used up in producing 57,315 holes 2.246 inches in diameter, 3½ inches long. The roughing reamer removes ⅛ inch of metal on each side and leaves 0.012 inch on each side for the reamer to remove. The time required is shown in table in Fig. 39. This includes time for inserting and removing castings.

Digitized by Google

SECTION III

HAND AND AUTOMATIC SCREW MACHINES

CHAPTER I

TURRET LATHES AND HAND SCREW MACHINES

There are many types of hand screw machines, and turret lathes and turret machines with hand and power feed, with numerous examples of the latter so arranged as to be semi-automatic in their operation after the work has been placed in position in the chuck. The limitations of this treatise make it impracticable to enter into full description of all of the various makes of tools of these classes. Illustrations are therefore presented in this chapter of a few types of turret lathes with brief description of certain important features of construction and operation. Numerous examples of various forms of turret and cross-slide tools are also included. These tools are in many cases similar to those used on automatic screw machines and details of construction and methods of upkeep and operation are fully covered in the Section IV of this book, to which the reader is referred for information relating to screw machine tools in general.

THE HAND SCREW MACHINE

The half tone Fig. 1 illustrates one of the hand screw machines built by the Pratt & Whitney Company, Hartford, Conn. This machine is constructed in different sizes of the same design as the example shown. Familiarity of the general reader with screw machines of the hand type makes it unnecessary to give detailed description of the machine as a whole, but certain features may be pointed out as of special value and interest.

Operation of the hand lever at the left, Figs. 1 and 2, controls the opening and closing of the chuck in the spindle nose and accomplishes the feeding of the bar of stock through the spindle and chuck. The chuck or collet seen in Fig. 2 is of the form shown in the second section of this book and methods of making and using are therein taken up in

Digitized by Google

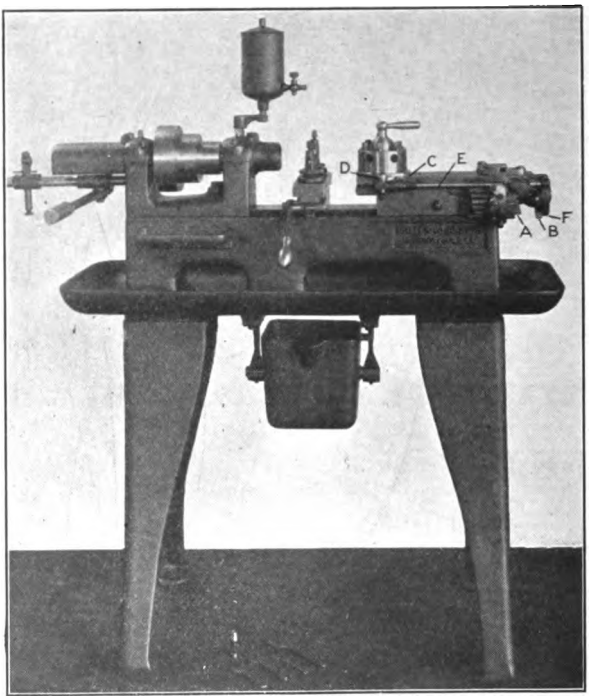

FIG. 1.—Small hand screw machines.

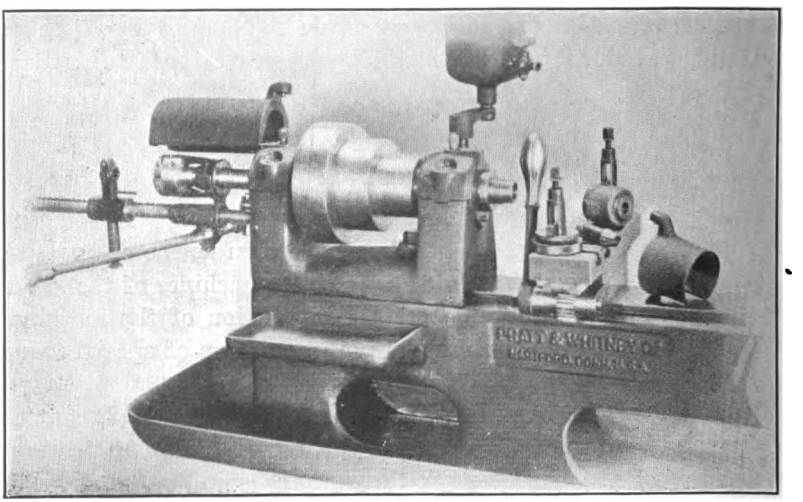

FIG. 2.—Head end of lathe.

Digitized by Google

detail. The system of stops for the turret is well shown by the half tone. These stops are placed at the right-hand end of the machine and there is a separate stop for each turret tool. The pressure against the stops *A*, Fig. 1, is taken by a stop lever *B*, the oscillation of which is governed by a cam *C* cut on the lower periphery of the turret. A roll *D* transmits the oscillating action to the stop lever through the medium of shaft *E*, which is under spring tension so that the roll is kept in proper contact with the cam. The stop lever *B* is always reinforced by the projection *F*, which is a part of the turret slide, so that a positive backing is secured at all times regardless of the pressure applied to the operating lever by the workman.

A FEW OF THE TOOLS

In Fig. 3 a number of tools are shown as used with this type of machine, for turning, pointing, etc. Thus tool *A* is a single radial box

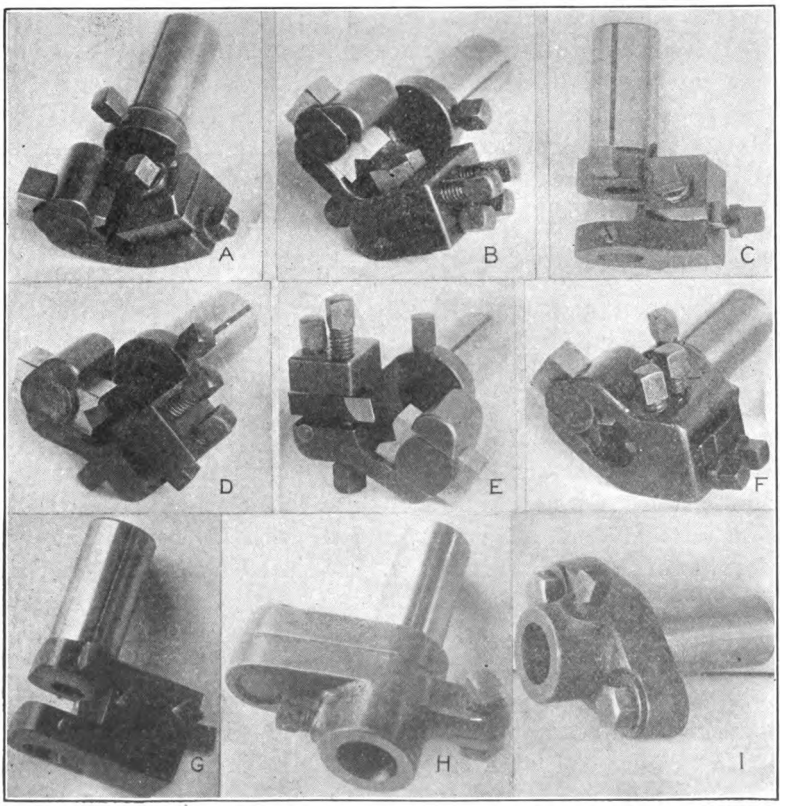

FIG. 3.—Tools for the machine.

Digitized by Google

tool, that is, it has a cutter located radially so that it may be adjusted for diameter without altering its lateral position. The back rests are of the V type, hardened and ground, as is also the seat in the body of the box tool. Tool *B* is a tangent box tool with two cutters known as a multiple tangent box tool, with the cutter located tangentially to the work, which makes it more suitable for heavy cuts. This arrangement admits of two diameters being turned simultaneously. Tool *C* is a radial bushing box tool in which the stock to be turned is guided in a hardened and lapped bushing. Tools *D* and *E* are single tangent tox tools, right and left hand. The box tool at *F* is a multiple radial tool for taking two cuts at once; *G* is a pointing tool; *H* a swinging recessing tool; *I* a floating tool holder for hollow mills, drills, reamers, counterbores and other internal cutting tools, where absolute alignment with the center is necessary to prevent them from cutting oversize. Among other tools used with this machine are tap and die holders, knurling tools, plain hollow mill holders, centering and facing tools, etc. Particulars of many such tools will be found in the second section of this volume along with other details already referred to. The size of screw machine described is the No. 1 and has a chuck capacity of $^{7}/_{16}$ inch with a maximum turning length of 2½ inches. The No. 2 machine of the same make has a chuck capacity up to ⅝ inch and a maximum turning length of 4½ inches.

LARGER MACHINES OF THE TURRET LATHE CLASS

Considering now certain types of larger machines known as turret lathes, Fig. 4 shows a Pratt & Whitney tool with a capacity for bar stock up to 2 inches diameter and a maximum turning length of 26 inches. This machine is adapted also for chucking operations and will swing over the bed 16¼ inches while the swing over the cross slide is 8¾ inches. As illustrated in Fig. 4, the machine is shown set up for piston ring work, the nature of the tools being chiefly seen in the view. Here turret and cross slide are provided with both power and hand feeds. The turret slide has independent adjustable stops for each turret face and the cross slide has adjustable stops governing both forward and backward movements of the slide. The spindle has 27 speeds ranging from 14 to 694 revolutions per minute, so that the machine is adapted to a wide range of work both on bar stock and on castings and forgings. In connection with bar stock operations, Fig. 5 is shown as a form of open side turning tool used on the turret of this machine. The photograph shows the method of adjusting the tool and the arrangement of ns, etc.

Digitized by Google

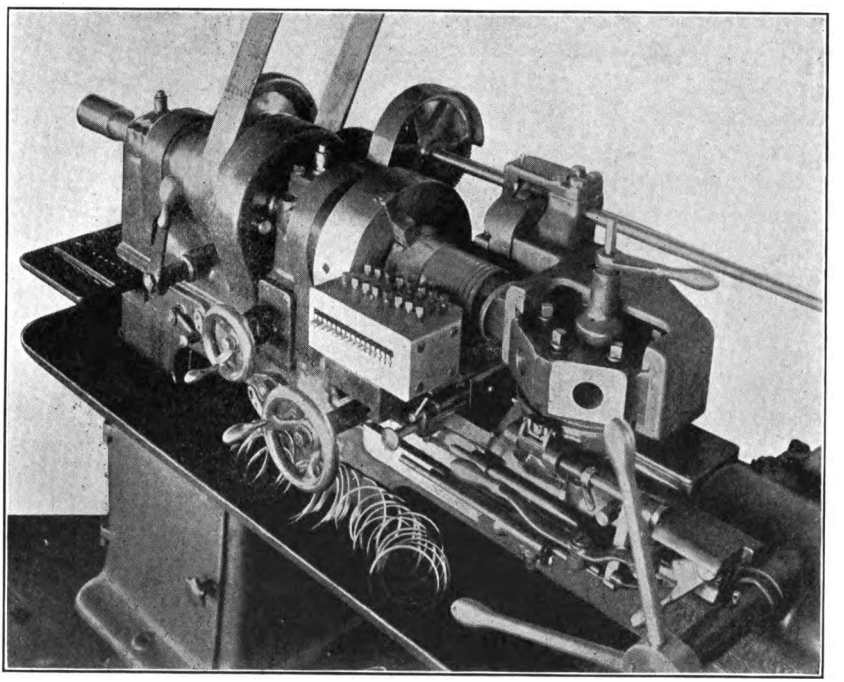

FIG. 4.—Two-inch P. & W. turret.

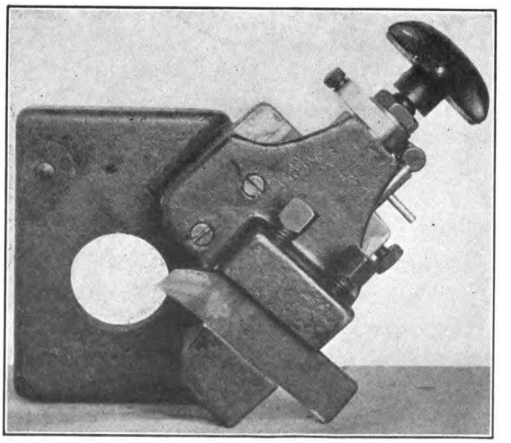

FIG. 5.—Open-side turning tool.

Digitized by Google

The 2½ by 26 inch turntable lathe of the same company is represented by Fig. 6 herewith, this illustration showing the machine as set up for producing bevel gears. Like the other machine just described, it is adapted to both bar and chucking work, the capacity through the automatic rod chuck (which has power feed) being 2½ inches, while the maximum length which may be turned is 26 inches. It swings over the bed chucking work up to 20 inches diameter and the swing over the special forming slide is 11 inches.

The carriage of this machine is equipped with a turn table of hexagonal form measuring 18 inches across flats. The tools are secured

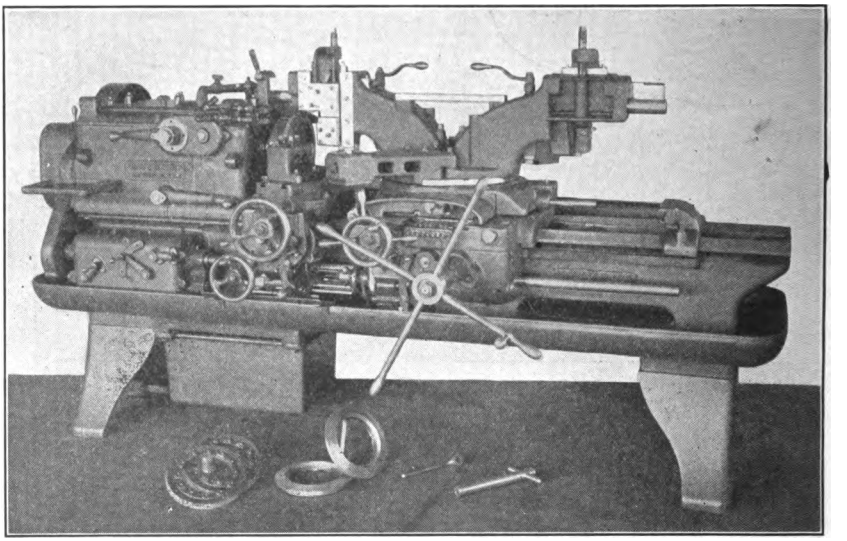

FIG. 6.—P. & W. Turntable lathe

directly to the flat face of this turntable. These tools are of simple type for standard work as indicated by illustrations that follow. For special operations the requisite tools and attachments are readily mounted on the turntable and operated with the convenience of standard equipment. The set up in Fig. 6 is of special interest as representing the method of machining automobile parts such as bevel gears and the like.

The carriage has a wide range of power feeds and the turntable similarly has a wide range of transverse feeds upon the carriage, both feeds being in either direction. Micrometer dials graduated in thousandths provide for accuracy and the series of nine carriage stops and eight turntable transverse stops facilitate the handling of all classes of machining operations. The positions of these stops are shown by the general view Fig. 6. The turntable stops and the construction of the

Digitized by Google

table itself are best seen in Fig. 7. The eight spindle speeds range from 10 to 251 revolutions per minute, the head being of the all geared, con-

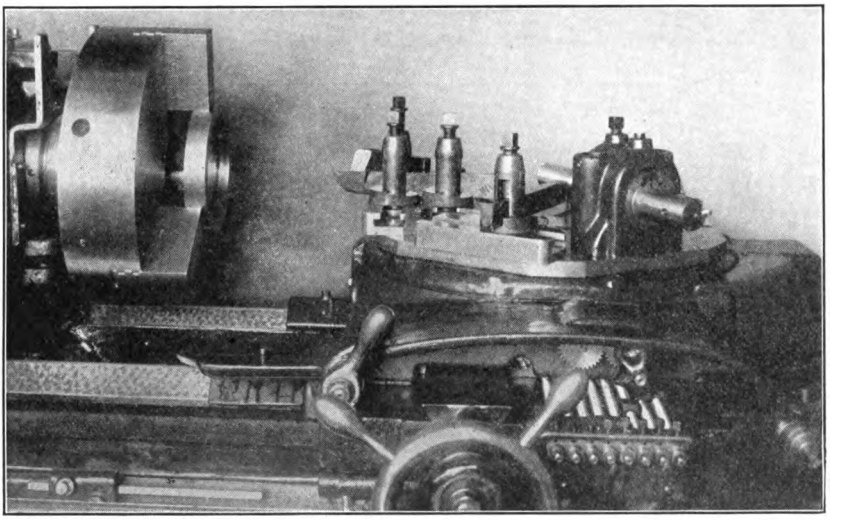

FIG. 7.—The turntable and stops.

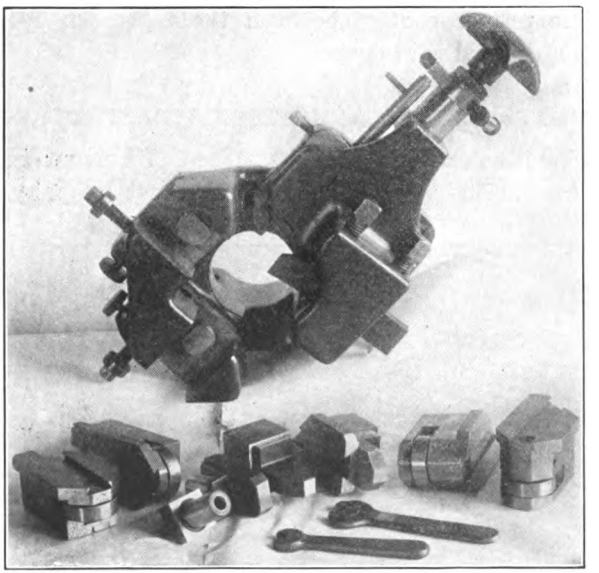

FIG. 8.—A universal turner.

stant speed type. The arrangement of the controlling levers for speeds and feeds is clearly seen in the view Fig. 6.

Digitized by Google

Of the various tools in the equipment of this machine, Fig. 8 is a universal turner with jaws and roller back rests for bar operations, and Fig. 9 a taper turner which is controlled by the taper bar at the top of the tool slide. The radial adjustment of the tool is accomplished

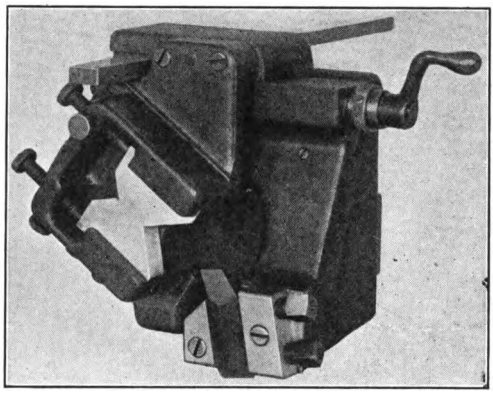

FIG. 9.—Taper turning tool.

through the taper bar block and screw. The slide is under spring tension to assume proper contact between the taper bar block and the taper bar when the tool is in operation.

UNIVERSAL HOLLOW HEXAGON TURRET LATHE

The machine illustrated by Fig. 10 is the 3-A universal hollow hexagon turret lathe built by the Warner & Swazey Company, Cleveland,

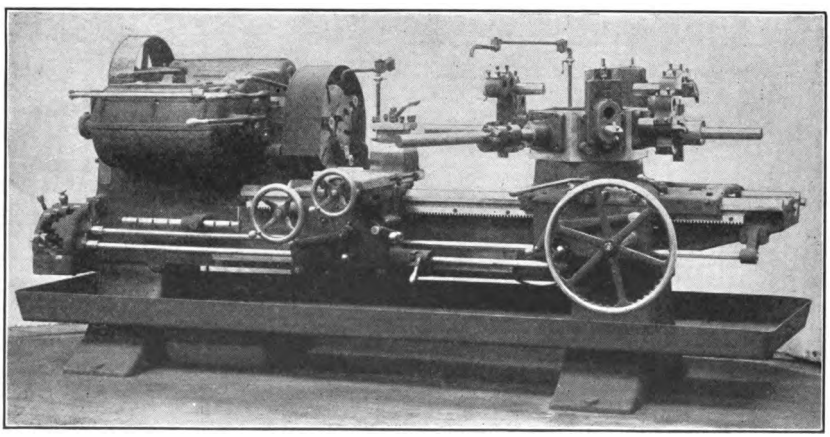

FIG. 10.—Warner & Swazey turret.

Digitized by Google

Ohio. This is one of several sizes of the same type of machine and is adapted for handling both bar stock and chucking work, the set up illustrated showing the chucking equipment. On bar operations the machine has a capacity up to 3½ inch by 44 inch work, and by substitution of a larger spindle and automatic chuck the capacity is extended

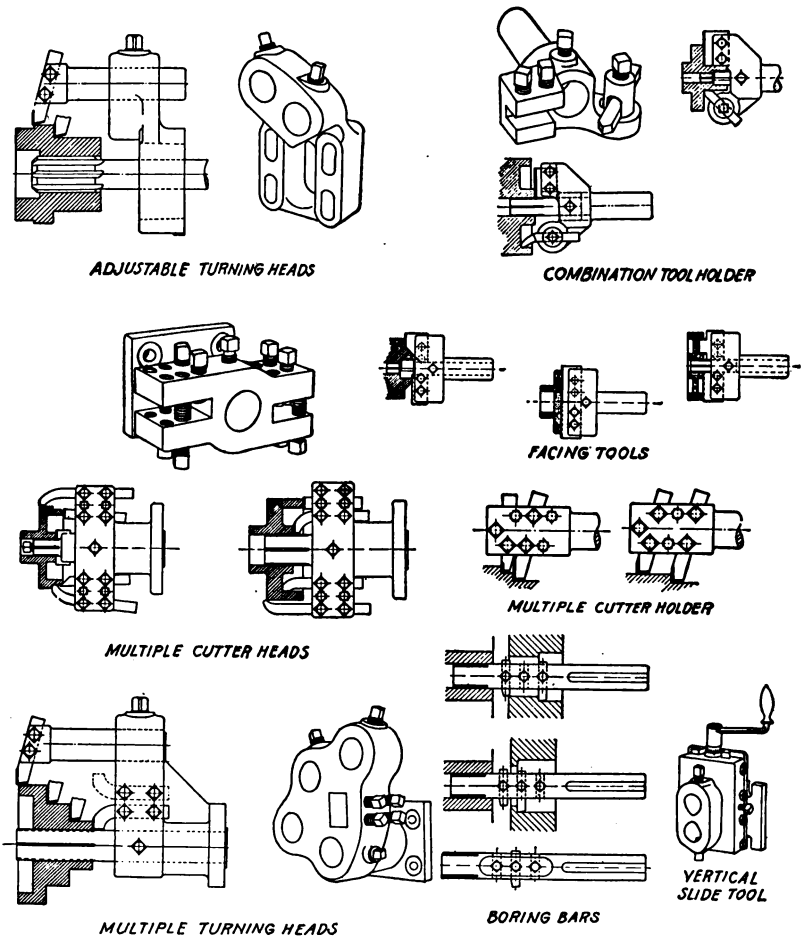

FIG. 11.—Some Warner & Swazey tools.

to work 4½ inches in diameter. On chucking work the capacity is 21½ inches swing over the bed and 17¼ inches over the carriage.

The all-geared head gives 12 forward and reverse speeds, the carriage has 10 feed changes in either direction and the turret saddle has a similar number of feeds, and a power rapid traverse. Complete sets

Digitized by Google

of independent stops are provided for carriage and turret and adjustable stops for automatic release of the power rapid traverse. Engaging either the power feed for the turret or for the rapid traverse disengages the other thus obviating possibility of damage to any part. The arrangement of all controlling levers and handles is well shown by the illustration, as is also the general character of the chucking equipment.

A few of the tools manufactured by this company for their various lines of turret lathes are shown by Fig. 11. These are for the most part for use in chucking operations, and do not include the very complete line of box tools, taper turners, die holders, knurling tools and other equipment made by the firm for machining parts from bar material.

In the chapters that immediately follow several types of automatic screw machines are illustrated and methods of setting up and camming them are described in detail. A considerable number of turret and cross slide tools are also shown in connection with the machines themselves, but for complete data pertaining to such tool equipment reference should be made to the second section of this volume.

Digitized by Google

CHAPTER II

CAMMING THE PRATT & WHITNEY AUTOMATIC SCREW MACHINE

A diagram of the Pratt & Whitney automatic screw machine with a set of cams in place is given in Fig. 12, *S* being the chucking drum; *T* the turret-slide drum; *U* the disk for the cross-slide cams; *V* the disk which carries the dogs for controlling the feed motion; *W* the disk whose dogs operate the lever for shifting the spindle-driving belts. Fig. 13 shows the development of the two cam drums with cams arranged for operating on a piece like Fig. 14. It will be seen that the turret cams fill the periphery of the drum, which is a desirable feature in the majority of cases as waste of time is then avoided.

CAMMING THE CHUCKING DRUM

As it is essential before camming the turret-slide drum to know what space will be required in unlocking and locking the chuck and feeding out the stock, the chucking drum *S*, Fig. 12, is first cammed without the necessity of a layout on paper, as is required in the case of the turret drum. It is assumed that the piece of work has just been severed from the bar, the chuck being locked firmly. The chuck is now unlocked as a starting point, and the unlocking cam *a* put on, the angle of this cam being about 25 degrees with the edge of the drum. The cam length must be sufficient to move chuck roll *b* far enough to release the spring chuck completely from the work. As soon as the chuck opens, the stock is ready to be fed forward, this movement being accomplished by cam *c*, which should be so put on as to contact the feed roll *d* immediately upon the unlocking of the chuck. An angle of 50 degrees is the usual slope for the stock feed cam; the length is obviously made to give a throw equal to or slightly in excess of the longest piece that the machine will produce. The chuck-locking cam *e* is next to be considered, and this is so located as to contact with chuck roll *b*, and start closing the chuck the instant the cam feed *c* has carried the feed roll *d* to the extreme forward position. Where the work is of a light nature and the chuck easily gripped on the stock, the angle of the chuck-closing cam *e* may be made the same as that of the unlocking cam *a*, namely 25 degrees; for work

Digitized by Google

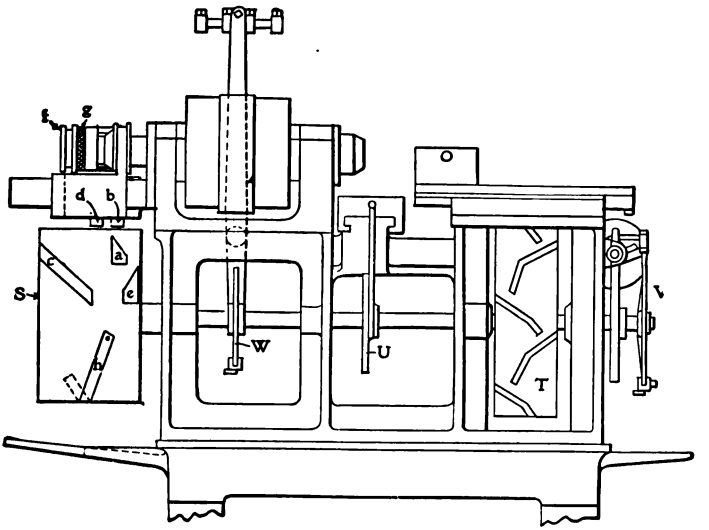

FIG. 12

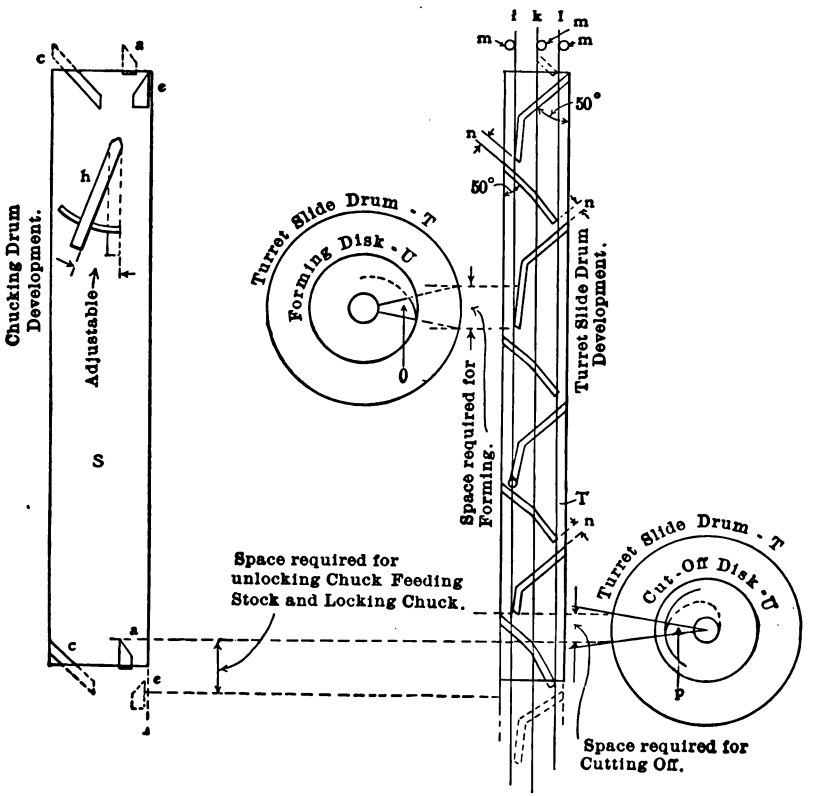

FIG. 13

FIGS. 12–13.—Cam arrangement of P. & W. automatic.

Digitized by Google

of a heavier character 20 degrees is a more suitable angle. In locating the feed cam *c* the feed plunger should be pushed forward into the spindle until the grooved collar *f* is against the knurled collar *g* at the rear of the chucking finger ring, which limits the forward movement of the feed tube and its roll *d;* it is apparent that this determines the position of the high point of the feed cam, though the left-hand end of that cam may be extended to the edge of the drum or beyond, if desirable, as in the case of the extra long feeds.

The feed "draw back" cam *h* is the last one to go on the drum; its function is to draw the feed tube to the rear, bringing the roll *d* into position to be pushed forward again by the feed cam *c* as soon as the chuck again opens. The "draw back" cam is pivoted as indicated, and may be adjusted to give any desired length of feed within the capacity of the machine. In locating this cam its pivoted end must be so positioned as not to strike the chuck-operating roll *b*.

As already stated, the camming of the chucking drum may be done satisfactorily without a layout on the drawing board, though where several machines are being cammed such a drawing may prove of considerable service.

THE TURRET-SLIDE DRUM

In camming the turret-slide drum a full-size drawing should always be made, the drum periphery being first laid out on paper as a rectangle, whose length and breadth represent respectively the circumference and width of the drum. A development of a turret-slide drum surface is seen in Fig. 13, with three locating lines, *i, k, l* for the series of cams. The position of these lines may be obtained as follows: A set of tools being placed properly in the turret, the latter is pushed forward as far as required to bring the tools in the right position relatively to the work, after which a scriber is placed on the right side of the roll *m,* which operates the slide, and a line *i* is scribed on the drum to represent the extreme forward position of the turret, hence no cams advancing the turret toward the chuck can project beyond this line. Next the turret slide is moved back to the point where the turret commences to index, and a line *k* is scribed on the drum ¼ inch from the left side of the roll *m,* after which the slide is drawn clear back to the right as far as possible, this movement completing the indexing and locking of the turret, and a third line, *l,* is then scribed at the left side of roll *m*. The reason for scribing line *k* (which locates the leading ends of the index cams) one-quarter inch to the left of the point where indexing really commences, is that we then insure the easy index cams coming into contact

Digitized by Google

with the turret-slide roll slightly before the slide actually reaches the indexing point.

We can now draw the three lines scribed on the drum on the full-size layout on the drawing board, as shown in the development, Fig. 13, and thus have the correct distance between the lines *i l* and *k l*. In this case we will call the former distance 2¼ inches, and the latter 1⅝ inches,

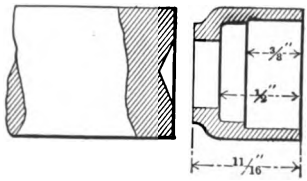

FIG. 14.—The work.

and may now proceed with the figuring of the cams for producing the piece, Fig. 14.

FEED CALCULATIONS

We will assume a speed of 250 revolutions per minute as suitable for the work, and use a starting or centering-and-facing tool in the first turret hole, a $^{7}/_{16}$-inch twist drill in the second hole, a roughing counterbore in the third hole, and a finishing counterbore in the fourth or last hole. In addition to the length of cutting feed required for each tool we will add ⅛ inch in each case for safety, and to allow for slight modifications in the character of the piece, thus making it possible for the slow feed to start into action as each tool reaches a point ⅛ inch away from the actual starting point of its cut. A schedule of the tool feeds may now be laid out as in Table 1.

TABLE 1.—TOOL FEEDS FOR WORK SHOWN IN FIG. 14

First hole	Starting tool,	0.004″ feed ⅛″ deep + ⅛″ allowance =	¼″
Second hole	7/16 twist drill,	0.005″ feed 13/16″ deep + ⅛″ allowance =	15/16″
Third hole	Rough counterbore,	0.010″ feed ½″ deep + ⅛″ allowance =	⅝″
Fourth hole	Finish counterbore,	0.015″ feed 15/32″ deep + ⅛″ allowance =	19/32″
	Finish counterbore,	0.005″ feed 1/32″ for bottom of cut =	1/32″
	Combined length of feed of all tools		= 2 7/16″

For carrying the turret forward to the point of cutting and for bringing it back to the point where indexing commences, cam angles of 50 degrees with the edge of the drum are generally used. Sometimes this angle is exceeded by a few degrees, 55 degrees being about the practical maximum limit, while it is very seldom necessary to drop below 50 de-

Digitized by Google

grees. The travel of the turret slide while indexing (from *k* to *l*, Fig. 13) should not generally be much greater than 20 feet per minute, this depending, however, upon the size of machine and tools used. This rate of travel with the work revolving, as stated above, at 250 turns per minute, would be equivalent to 240 inches for 250 turns of the spindle or 0.96 inch per revolution. While the indexing is done with the fast speed of the cam-drum shaft, it is desirable in the cases of all turret-slide movements for which cams have to be figured to state the feed per turn of spindle at its equivalent at slow cam-shaft speed. With a feed motion having a ratio of 24 to 1 this means that the indexing movement of 0.96 inch per turn when expressed at the slow cam-shaft rate would be 0.96 divided by 24=0.04 inch per revolution.

HOW THE DRUM SURFACE IS UTILIZED

Before figuring the angles for the cutting and indexing cams we can simplify matters by taking from the total circumference of the drum, which measures, say, 48 inches, the amount of space as measured around the drum periphery utilized by the 50-degree cams, the eight roll spaces, and eight 1/4-inch flats formed by dressing off the forward ends of the four cutting cams and the rear ends of the four indexing cams to obviate wear of the cam corners. The distance *i* to *l*, Fig. 13, which as already stated is 2 1/4 inches, is temporarily taken, for purposes of calculation, as representing the forward and backward travel of the turret slide. Actually, of course, the travel would be equal to the distance between the centers of roll *m* in the extreme forward and backward positions. However, it is more convenient and in no way affects the result to assume distance *i* to *l* as defining the true length of travel.

That is, we can assume for the moment that the roll is of infinitely small diameter, its travel then being simply from line *i* to *l*. Now if we increase the roll diameter to 1 1/8 inches we merely extend the outer ends of the 50-degree cams sufficiently to overlap the actual roll travel, and at the same time we increase the working space between the cams to allow the roll to pass through. As these roll spaces between the cams are later taken into consideration in our calculations for determining the actual distance around the periphery of the drum consumed by the 50-degree cams, we can disregard altogether the portions of these cams extending outside of lines *i* and *l*. Now, as there are four forward and backward movements to complete the cycle of operations, the total turret travel to and fro may be represented by a quantity equal to 8 × distance *i* to *l*, or 8×2 1/4 inches = 18 inches. According to the table giving the feeds of the four tools to be used, 2 7/16 inches of turret travel is required in the cutting operations; the distance from *k* to *l* being 1 5/8

Digitized by Google

inches the total indexing travel is obviously $4 \times 1\frac{5}{8} = 6\frac{1}{2}$ inches. From the 18 inches which we have taken as representing the total travel of the turret slide, therefore, must be deducted $2^{7}/_{16} + 6\frac{1}{2}$ inches, leaving $9^{1}/_{16}$ inches travel controlled by the 50-degree cams, which, as previously stated, are generally used for non-cutting and non-indexing movements. The peripheral drum space occupied by these cams is then equal to $9^{1}/_{16}$ $\times$ cotangent of 50 degrees, or 9.0625 inches $\times$ 0.84=7.61 inches.

If the cam roll *m* is $1\frac{1}{8}$ inches in diameter, and we allow $\frac{1}{8}$-inch clearance, we have as the peripheral distance occupied by these cam spaces $8 \times 1\frac{1}{4}$ inch $\times$ cosecant of 50 degrees or 10 inches $\times$ 1.3=13 inches. The eight $\frac{1}{4}$-inch flats on the ends of the cams=2 inches peripheral drum space utilized in this fashion. The total circumference of the drum, 48 inches,—7.61 inches—13 inches—2 inches leaves 25.39 inches peripheral space on the drum available for the cams whose angles have to be computed.

COMPUTING THE CUTTING AND INDEXING CAM ANGLES

We have now this space of 25.39 inches measured lengthwise of the cam drum surface to utilize for the cutting and indexing cams. The next thing to determine is the number of revolutions of spindle required for the several operations on the piece of work. This is calculated as below from the data in Table 2.

TABLE 2.—SPINDLE REVOLUTIONS REQUIRED IN MAKING PIECE SHOWN IN FIG. 14

1st tool	Travel of turret, 0.250″	at 0.004 feed per revolution=	62.5 rev.
2d tool	Travel of turret, 0.9375″	at 0.005 feed per revolution=	187.5 rev.
3d tool	Travel of turret, 0.625″	at 0.010 feed per revloution=	62.5 rev.
4th tool, 1st part	of travel of turret, 0.5937″	at 0.015 feed per revolution=	39.5 rev.
2d part	of travel of turret, 0.0312″	at 0.005 feed per revolution=	6.2 rev.
Indexing.	Travel of turret, 6.5″	at 0.04 feed per revolution=	162.5 rev.
	Total number of revolutions necessary		=520.7

Thus we find that for the 25.39 inches of drum periphery available for the cams to be figured, the spindle should make 521 turns, or 20.5 turns for each inch of cam-drum space. This spindle velocity per inch of drum space will be approximated very closely by using on the countershaft a 10-inch driving drum for the spindle and a 6-inch pulley for driving the feed motion. The question of spindle and feed-pulley ratios is discussed more fully later on.

Knowing the feed per revolution for each tool, we find the angle for the cam for that tool by multiplying the rate of feed by 20.5 which gives the tangent of the desired angle.

The angles for the various cams are then as follows:

Digitized by Google

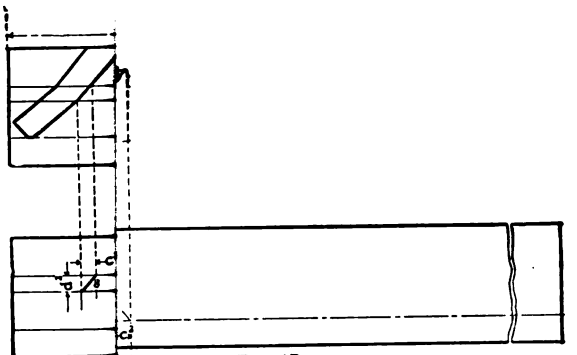

FIG. 17

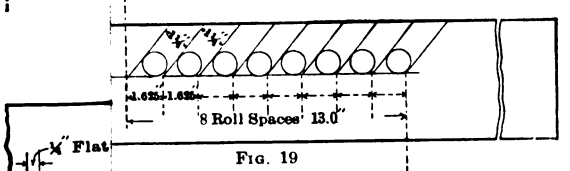

FIG. 19

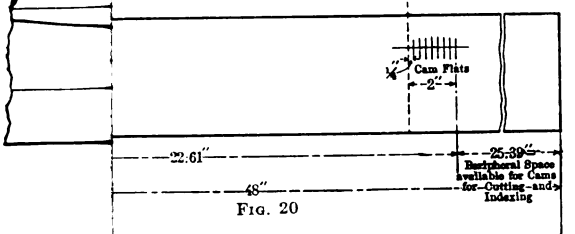

FIG. 20

etc.

[To face page 120]

id out
ameter
id the
g left
larger
awing
ven in
prac-
rming
irface
For
course
of the

lcula-
ace in
which
l and
egree
aches.
rep-
ines *i*
epre-
index
ns to
v the
tance
ount
cams,

hout
thod
thod

Digitized by Google

Digitized by Google

TABLE 3.—CUTTING AND INDEXING CAM ANGLES

First tool	0.004″ feed×20.5=0.082	=tangent of 4° 42′
Second tool	0.005″ feed×20.5=0.1025	=tangent of 5° 51[
Third tool	0.010″ feed×20.5=0.205	=tangent of 11° 36′
Fourth tool	0.015″ feed×20.5=0.3075	=tangent of 17° 5′
Fourth tool	0.005″ feed×20.5=0.1025	=tangent of 5° 51′
Indexing.	0.04″ feed×20.5=0.82	=tangent of 39° 21′

The angles having been determined, the cams may now be laid out on the full-size drawing, a space *n*, Fig. 13, equal to the roll diameter plus ⅛-inch clearance being left between the adjacent cams, and the flats of ¼-inch which prevent wearing of the cam corners being left on the working ends of each cam. A layout of these cams to a larger scale (about ⅛ actual size) is presented in Fig. 15, and in this drawing the angles of the cams are all shown. While these angles are given in degrees and minutes, the nearest half degree is sufficiently close in practice. It may be of interest at this point, before considering the forming and cut-off cams, to show diagrammatically how the cam-drum surface is divided among the various cams which have been just laid out. For this purpose Figs. 16 to 20 inclusive have been drawn, although of course such diagrams would not be actually used in the working out of the camming problem.

The portions of the 50-degree cams used in the foregoing calculations are here shown transferred below to the similar drum surface in Fig. 16, where a series of triangles 1, 2, 3, 4, 5, etc., are drawn which when arranged in the order shown in Fig. 17 indicate the forward and backward movement of the turret due to that portion of the 50-degree cams which entered into the previous calculation, giving $9^{1}/_{16}$ inches. The 18-inch vertical line on which this $9^{1}/_{16}$ inch travel is laid off represents the total travel of the turret back and forth between the lines *i* and *l*, 8×2¼ inches. Hence the $8^{15}/_{16}$-inch portion of that line represents that amount of turret travel due to the cutting and index cams. Fig. 18 is drawn to double the scale of the other diagrams to show more clearly the flats and roll spaces. Figs. 19 and 20 show the eight roll spaces and the cam flats added to the peripheral distance utilized by the 50-degree cams, and the latter sketch indicates the amount of drum space actually left for the cutting cams and the index cams, which has previously been found to be 25.39 inches.

FINDING THE CAM ANGLES GRAPHICALLY

If preferred, the angles of the various cams may be obtained without reference to tables of trigonometrical functions. Although this method of finding the angles is very convenient, many will prefer the method

Digitized by Google

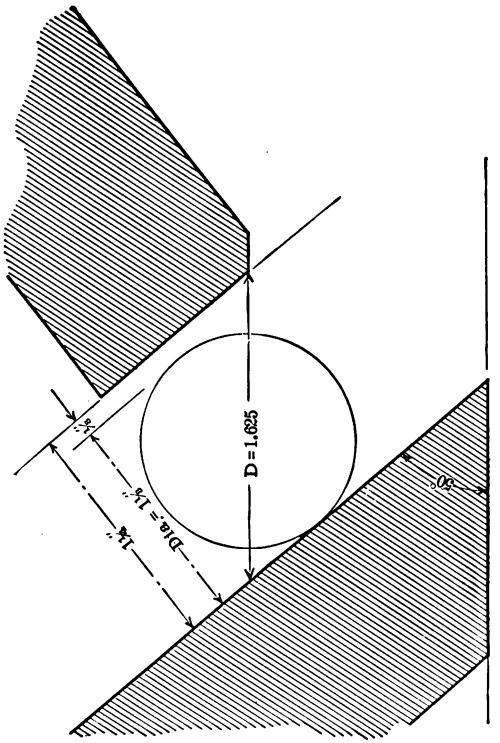

Fig. 22

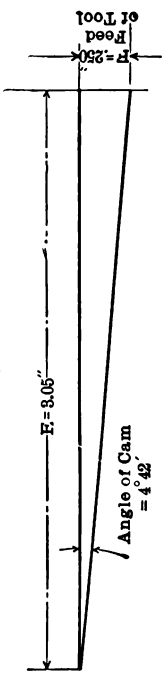

Fig. 23

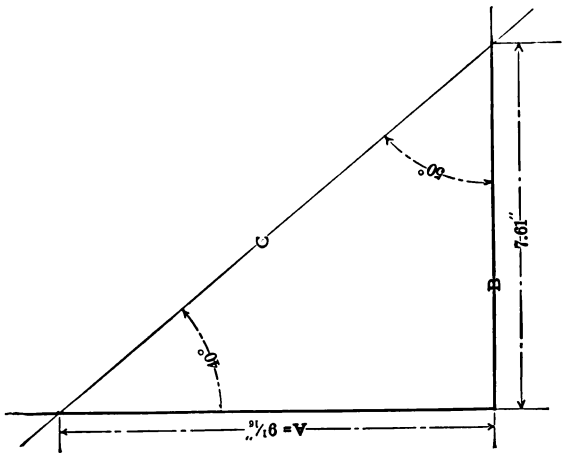

Fig. 21

Figs. 21–23.—Finding cam angles, and roll spaces without mathematics.

Digitized by Google

given below, which does not involve the use of trigonometry. A hint of this is given in Fig. 17. Say we draw a perpendicular line *A*, Fig. 21, on the drawing board $9^1/_{16}$ inches long, representing the to-and-fro travel between lines *i* and *l* by 50-degree cams, then draw a horizontal base line *B*, to which we draw a line *C*, from the top of the vertical line forming an angle of 50 degrees with the horizontal base line. The portion of the latter thus cut off will indicate the space measured around the drum which the 50-degree cams between lines *i* and *l* occupy, or 7.61 inches which can be measured with a scale accurately enough for all practical purposes.

Next we wish to determine the peripheral distance occupied by each cam-roll space and can find this by a similar process of laying out the roll between the ends of two cams as at *D*, in Fig. 22. If the layout is made double or four times the actual size, the result obtained by scaling will be more accurate and in fact quite near enough to the figured distance. Multiplying the distance *D* by 8 will give us the space required by the eight cam-roll spaces, and adding this to 7.61 inches plus 2 inches for the eight ¼-inch flats on the cam ends gives us the total amount to subtract from 48 inches (the circumference of the drum) to obtain the amount left for the cutting and indexing cams (or 25.39 inches). We have already found that the spindle makes 521 turns during the travel of the drum through a distance of 25.39 inches, or 20.5 turns per inch of drum travel. By referring back to our figures in Table 2, we see that the first tool will require 62.5 revolutions in feeding its distance of 0.250 inch toward the chuck at 0.004 inch per revolution. In other words, this tool will require a drum travel of (62.5 divided by 20.5) or 3.05 inches. Laying off a line of this length as *E*, in Fig. 23, and drawing a perpendicular of 0.250 inch to represent the feed distance, we have then merely to measure the angle with the protractor which will give us at once the correct angle for this cam. The angles of all the other cams may be obtained by a similar process, the side *F* of the triangle laid out representing the total feed or turret-slide travel required for the cam in question, and the length *E* representing the distance in inches which the drum travels while the spindle is making the number of revolutions necessary for that particular operation, as shown by Table 2. As suggested, it will be well to make the outlay double size or larger, thus minimizing the possibility of error in scaling the lines and measuring the angle.

Digitized by Google

THE FORMING AND CUTTING-OFF CAMS

Returning now to the forming and cutting-off cams, Fig. 13 shows these members laid out on the opposite sides of their disk. The forming tool cuts down the neck and fillet at the rear of the piece Fig. 14 and should be fed at about 0.002 inch per revolution, the operation being performed at the same time as the drilling. We have found that the spindle makes 20.5 revolutions to every inch of turret-slide drum travel, and this means that in a forming movement of ⅛ inch or 0.125 inch at 0.002 inch per turn, we require 62½ revolutions, which is equivalent practically to 3 inches of drum travel. Laying off this amount on the drum *T*, we can run the radial lines indicated to the center of the cam disk to define the limits of the forming cam *o*. In drawing the working edge of the cam we strike a curve giving a throw somewhat greater than ⅛ inch, according to the location of the pinion which the cross-slide operating arms are pivoted. Thus, if the upper end of the rocker arm is ¾ the length of the lower, it means practically that for every 0.001 advance of the cam slide the lower end of the arm must move outward about 0.0013 inch. The forming movement of 0.125 inch requires then a cam throw of 0.1625.

In cutting off the completed work a feed of about 0.0025 inch per revolution will be suitable. If the thickness of the metal plus a reasonable amount for clearance, etc., is equal to ⅛ inch, the work will make 50 revolutions during the operation; at 20.5 revolutions of the spindle per inch of turret-slide drum travel the travel of the drum during the operation of the cut-off cams will be approximately 2½ inches. This operation may commence at or slightly before the completion of the finish counterboring as shown in Fig. 13, where the cut-off cam *p* is drawn in on its side of the disk in the same manner as the forming cam just described. With the cam slide levers pivoted at the point mentioned in connection with the forming cam the cut-off movement of ⅛ inch will require a cam throw of about 0.166 inch.

It will be obvious that the turret-slide drum must have sufficient space between the points where the cut-off operation is completed and the first operation on the next piece is commenced to allow for the opening of the chuck, the feeding of the stock, and the locking up of the chuck on the work.

This distance is indicated clearly in Fig. 13.

In putting the cams on the turret-slide drum the correct starting position for the first cam can be easily located by squaring across from the locking-up cam on the chucking drum, which cam must close the chuck tight before the first tool is brought quite into working position.

Digitized by Google

Where a stop is used in the first hole in the turret the stop cam on the drum is so located relatively to the chucking cams as to bring the stop to its extreme forward position just before the stock is fed completely out and the chuck closed.

SPINDLE DRUM AND FEED PULLEY CONSIDERATIONS

In the preceding matter it has been shown that after subtracting from the circumference of the turret-slide drum the peripheral space occupied by the 50-degree, or non-cutting and non-indexing cams, the eight cam-roll spaces and the eight ¼-inch flats on the cam ends, we have left a certain distance available for the cutting and indexing cams whose angles have to be figured or obtained by layout and measurement. We have found, too, that during the rotation of the drum through a certain distance equal to the space occupied by these cams, the spindle should make a certain number of revolutions (as per Table 2) determined by adding up the number of turns necessary for taking the different turret-tool cuts at the desired rates of speed, plus the turns during the indexing movements. In order, therefore, that the spindle and cam drum shall be driven at the proper relative speeds, with any given ratio of gearing in the feed motion, the question of the relative diameters of the spindle-driving drum on the countershaft and the feed-motion driving pulley on the same counter has to be taken into consideration. For it is obvious that, both spindle and feed motion being belted from the one countershaft, if we are using say a certain diameter of counter drum for driving the spindle, any change in the size of pulley for driving the feed motion will affect the rate of turret-slide feed per revolution of spindle.

SPINDLE AND FEED-DRIVE RATIOS

In Fig. 24 is shown by diagram the arrangement of pulleys on countershaft, spindle, and feed motion, *A* being the drum for driving the spindle in either direction through reversing belts running on spindle pulley *B*, which is located between two loose pulleys; *C* is the countershaft pulley (known as the "feed pulley") for driving the cam-drum shaft *D* through pulley *E*, which operates the worm shaft and worm gear *F* at low speed through the planetary gearing indicated at *G*, or directly at high speed by a clutch connecting the pulley directly to the worm shaft. On the No. 1 machine, for example, the spindle pulley *B* has a diameter of 6⅝ inches, and the feed-motion pulley *E* is 6 inches. The worm gear has 84 teeth meshing with a triple-thread worm, and 28 turns of the worm shaft are required to drive the cam shaft and cam drums through one complete revolution. With a 24 to 1 ratio of gearing in the feed drive at *G*, it is obvious that the pulley *E* must turn 24×28

Digitized by Google

times, or 672 turns to each revolution of the drum shaft—assuming, of course, that the slow motion (24 to 1) is in operation throughout the complete cycle. The circumference of the turret-slide drum *H* carried by the latter being 48 inches, for each inch of peripheral travel of the drum, the pulley *E* on the feed drive must turn (672 ÷ 48) = 14 revolutions. If we have (as found in connection with Table 2) a peripheral distance of 25.39 inches to travel during 521 turns of the spindle in order to give the required feeds with the cams, as figured out, the spindle must make 20.5 revolutions for each inch of drum travel. That is, while pulley *E*, Fig. 24, is making 14 revolutions, pulley *B* must make 20.5 revolutions. If the two pulleys were of the same diameter, the diameter of the countershaft drum *A* and feed pulley *C* would of course

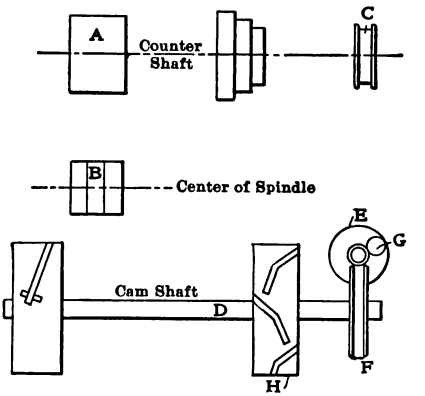

FIG. 24.—Diagram of spindle and cam-shaft drive.

be in the ratio of 20.5 to 14 or 1.46 to 1. The spindle pulley, however, is 6⅝ inches diameter and the worm-shaft pulley *E* 6 inches; therefore the countershaft pulleys will be in the ratio of (20.5 × 6⅝) to (14 × 6) = 136 to 84, or a ratio of 1.62 to 1. This ratio will be approximated very closely by a spindle-driving drum of a diameter of 10 inches and a feed pulley of 6 inches.

The foregoing matter has been presented in order to show the relation existing between the speed of the spindle and the speed of the cam-drum drive. In practice, the diameter of the feed pulley required to be used in conjunction with any given diameter of driving drum for the spindle may be more directly obtained by the aid of a simple table—like Tables 4, 5, 6, or 7 on pages 132 to 135. After we have found our cam angles as already described, we may take the angle of any one of the cutting cams and use this in connection with our table for finding the required size of feed pulley.

Digitized by Google

USE OF THE TABLES

Referring now to Table 5, this table is arranged with columns for each feed-motion ratio from 24 to 1 down to 2.7 to 1. The quantities in these columns are obtained by dividing the tangent of the angles from 1 to 45 degrees in the second column by the feed-pulley constants 12.7, 5.91, etc., given at the heads of the respective columns. The feed-pulley constant, it should be noted, is equivalent to the number of revolutions of the head spindle to each inch of peripheral travel of the turret drum, with the same diameter of pulleys on the counter for driving the spindle and the feed mechanism. As indicated by the formula at the bottom of the table, the feed per revolution

$$= \frac{\text{tan. of angle}}{\text{feed-pulley constant}} \times \frac{\text{feed pulley}}{\text{counter drum}}$$

and as the six columns under the respective ratios are always worked out giving the equivalent of

$$\frac{\text{tan. of angle}}{\text{feed-pulley constant}}$$

the feed revolution for any cam angle with any given ratio of gearing in the feed motion is found by multiplying the quantity opposite the angle and in the required column by the feed-pulley diameter and then dividing by the diameter of the counter drum driving the head spindle.

Now, with a given diameter of counter drum for the spindle, and with the angle determined for any cam and the rate of feed given which we wish to produce with that cam, we can find the diameter of feed pulley required to produce that rate of feed by a formula as follows:

Dia. feed pulley=feed per rev.$\times$dia. counter drum

$$\div \left(\frac{\text{tan. of angle}}{\text{feed-pulley constant}} \right)$$

As we have the expression

$$\frac{\text{tan. of angle}}{\text{feed-pulley constant}}$$

already worked out in the table for the various angles, it is merely necessary to multiply the feed per revolution by the diameter of the drum for driving the spindle, and divide by the quantity opposite the cam angle under the proper column. Thus, if one of the cams in the set which we have already figured out is to give a rate of feed of 0.005 inch per turn of spindle (using the 24 to 1 ratio) the cam angle being prac-

Digitized by Google

tically 6 degrees, and if we are using a 10-inch drum on the countershaft for driving the spindle, we can find the size of the feed pulley required by multiplying $0.005 \times 10 = 0.05$ and dividing by 0.00827 (found opposite 6 degrees and in the 24 to 1 ratio column) $= 6$. Hence a 6-inch pulley is the proper size to use. It will be obvious that owing to the method used in determining the angles of the set of cams for the turret-slide drum, it makes no difference whatsoever which cam is used as a basis for working out the feed-pulley diameter.

Similar tables which are included for the other sizes of machines should be found of considerable value.

FEED CHANGES

The figures in the different ratio columns in Table 5 actually show the rates of feed per revolution of spindle which would be obtained if the feed pulley and spindle-driving drum on the countershaft were of the same diameter, and by following across the table on any horizontal line the possible variations obtainable by the six different ratios of gears for use in the feed mechanism will be clearly seen. The actual feed changes produced by different angles of cams and various sizes of feed pulleys and counter drum with a given ratio of gearing are shown by Tables 8 to 11. Table 9, for example, is worked out for the No. 1 automatic and for a 24 to 1 ratio of feed gearing, and it will be apparent from this table that very fine changes of feed are obtained with any given feed pulley and counter drum by slight modification in cam angles; the entire range, of course, being greatly increased when we introduce the gears of other ratios into the feed drive.

It should be borne in mind that after the machine has been cammed in accordance with the method described, the rate of feed per turn of spindle derived from the cam may be increased or decreased by changing the gears in the feed motion without affecting the rate of turret-slide travel during the indexing movement. This is due to the fact that the indexing is accomplished with the feed-motion pulley clutched direct to the cam shaft for driving the cam drum, that is, the "fast motion" is then in operation and this drives at a constant speed unless the feed pulley on the countershaft is changed, or the speed of the counter itself altered by shifting the position of the belt on the three-step driving cone. While the indexing cams are laid out for performing their work with the turret slide traveling at about 20 feet per minute, some departure may be allowed either way from this normal rate, such, for instance, as might be due to a slight change in diameter of feed pulleys.

Digitized by Google

THE TWO-SPEED SPINDLE DRIVE

It is quite common practice now, with the Pratt & Whitney automatic, to equip it with a two-step pulley for operating the head spindle in place of a single-diameter drum formerly used for this type of machine. This gives the spindle two rates of speed (ordinarily 2 to 1) and the higher speed is generally employed for the backing belt. Thus, a suitable countershaft speed may be selected for the rough-turning cut and for threading, using the forward belt (except in very unusual cases where a left-hand thread is to be cut), and the fast backward speed is then utilized for finish turning and cutting off, a left-hand finishing box tool being used and the cut-off being carried on the rear end of the cross slide. If a forming tool is required, this is carried at the front of the cross slide and operated while the roughing box tool is cutting, with the spindle operating at its slow speed. The spindle then reverses upon the completion of the rough-turning and the forming operation, and runs backward at double the forward speed while the finishing tool is in operation. If the piece is to be threaded, the slower forward speed is utilized while cutting; and after the die has run on, the spindle again reverses to high speed while the die is run off and the cut-off tool severs the work from the bar. This two-speed arrangement is a very advantageous one as it makes it possible to drive the spindle at speeds best adapted for the cuts taken by the different classes of tools used on the work, and thus greatly increases the output.

In plotting out cam angles for use in connection with the two-spindle drive it is advisable to reduce all feeds per revolution to what they actually would be in case only one of the two speeds was used, and thus simplify the problem.

For example, if we have a constant feed of 0.005 inch per revolution at 100 revolutions per minute, and another constant feed of 0.005 inch at 200 revolutions per minute, it is advisable to consider both at the same number of revolutions per minute. To reduce the former to the latter $=0.005$ inch $\times {}^{100}/_{200}$ or 0.0025-inch feed at 200 revolutions per minute, while the latter would, of course, remain 0.005. The tangents of the angles for the cams to be used would, of course, be 2 to 1, while the actual feeds per revolution at the speeds used are equal.

Fig. 25 shows a cam outlay for a machine using the two-speed spindle drive, the turret-cam drum surface development being shown in two sections for convenience. The forming and cutting-off cams are sketched in at the side of the drum layout with the circles drawn to clearly indicate where the forming and cut-off operations commence and end. The cams shown are suitable for general screw work, the first cam A being a

Digitized by Google

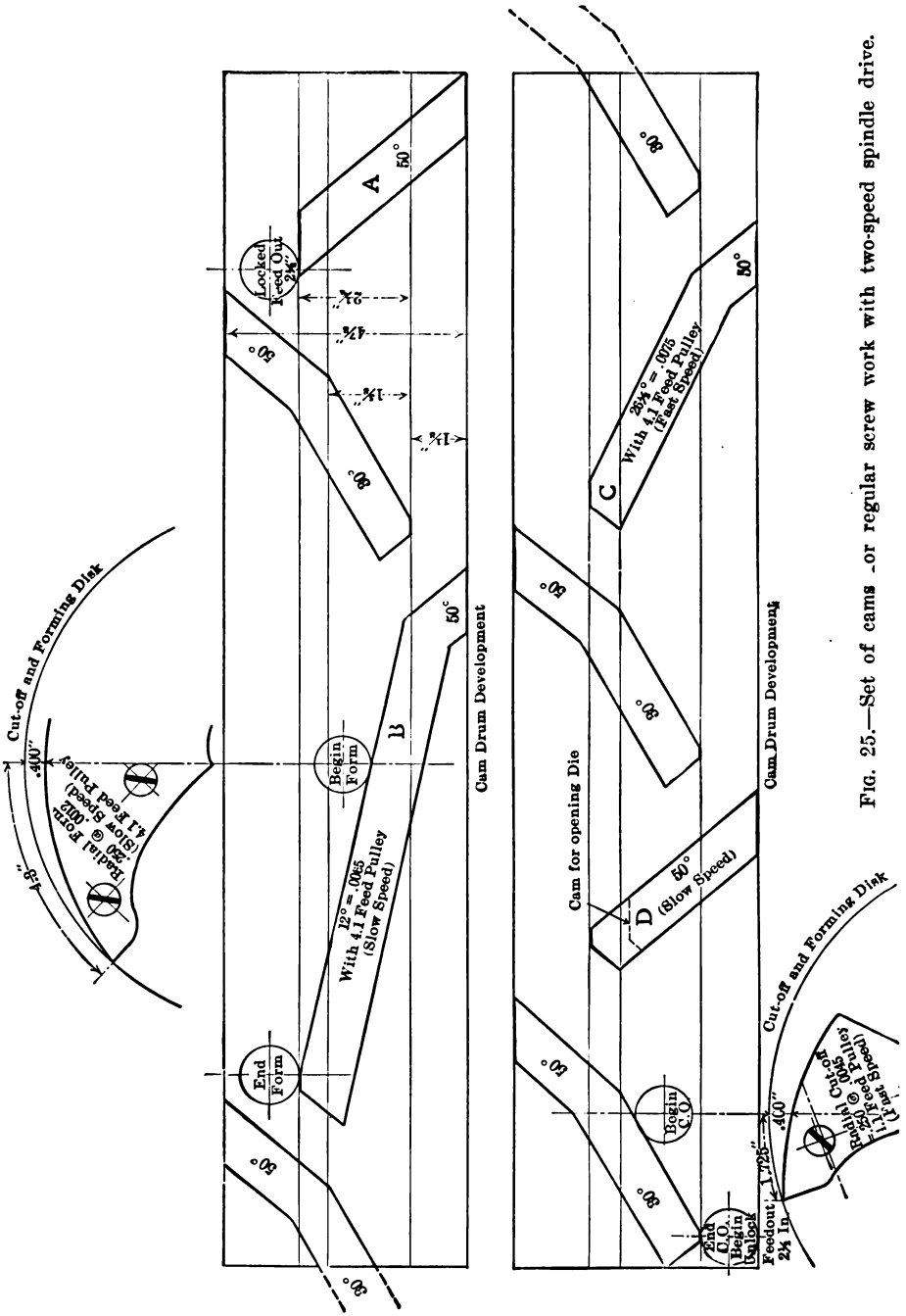

FIG. 25.—Set of cams or regular screw work with two-speed spindle drive.

Digitized by Google

plain 50-degree stop cam which holds the turret in its forward position, while the stock feeds out. Cam *B* for the roughing-box tool, and the forming cam on the cross-slide disk, are in operation while the spindle runs at its slow speed, and cam *C* for the finishing cut feeds the finishing-box tool over the work with the spindle operating at its fast speed. The slow spindle speed is used while the die is run on by cam *D*, and the fast speed is again employed during the cutting-off operation. It will be noticed that extra space is left between the end of the die cam *D* and the last draw-back cam. This extra clearance is provided in order that the die may have ample time to run up on the screw and reverse before the draw-back cam comes into action against the turret-slide roll. Where an opening die is used, mounted on a sliding holder, the die cam may be made shorter as indicated by the dotted lines.

The forming tool is used advantageously on regular screw work for necking down at each side of the head while the roughing-box tool is in operation. This reduces the work of the cutting-off tool and on many jobs relieves the box tool of the work of finishing the under side of the head.

PUTTING ON THE CAMS

A few words regarding the forming and placing of the cams in position on the drums and cut-off disk may not be out of place here. After the angles, lengths, etc., have been found the cams may be cut from the flat stock to the right length and proper angles at the ends by means of a saw in the milling machine, swiveling the vise to give the required angles for the ends, and then the holes for the tap bolts are drilled, after which the cams are bent to conform to the curvature of the drum. Tough steel that will admit of being hardened should be used, and after the pieces are hardened they are located one by one on the drum, and the latter drilled and the holes tapped for the tap bolts which secure the cams in place. The turret-slide cams are located in the right positions relative to the chucking drum cams by squaring across from the chuck-closing cam on that drum, this giving the right location for the first cam on the turret-slide drum. It must be kept in mind that the chuck-closing cam must close the chuck completely before the cutting part of the first cam on the turret drum comes into contact with the cam roll.

The forming and cutting off cams are located on their disk so that the ends of these cams are just passing the ends of the cross-slide levers when the points on the turret cams marked in the layout "end of forming" and "end of cut-off" are just in contact with the turret-slide roll. The idea will be clear from the drawing in Fig. 25.

Digitized by Google

P. & W. No. 0 Automatic		TANGENT OF ANGLE / FEED PULLEY CONSTANT					
		RATIOS					
Degrees	Tangent	24:1	11.16:1	5.81:1	4:1	3.14:1	
		Feed Pulley Const. 37.3	Feed Pulley Const. 17.35	Feed Pulley Const. 9.03	Feed Pulley Const. 6.22	Feed Pulley Const. 4.88	
1	.01746	.00046	.0010	.0019	.0027	.0035	.....
1½	.02619	.00070	.0015	.0029	.0042	.0053	.....
2	.03492	.00093	.0020	.0039	.0056	.0072	.....
2½	.04366	.00117	.0025	.0048	.0069	.0088	.....
3	.05241	.00140	.0030	.0058	.0084	.0107	.....
4	.06993	.00187	.0040	.0078	.0113	.0143	.....
5	.08749	.00234	.0050	.0096	.0140	.0178	.....
6	.10510	.00282	.0060	.0116	.0169	.0215	.....
7	.12278	.00329	.0071	.0136	.0198	.0252	.....
8	.14054	.00376	.0081	.0155	.0225	.0287	.....
9	.15838	.00424	.0091	.0175	.0254	.0324	.....
10	.17633	.00472	.0101	.0195	.0283	.0361	.....
11	.19438	.00521	.0112	.0215	.0312	.0398	.....
12	.21256	.00569	.0122	.0235	.0341	.0435	.....
13	.23087	.00618	.0133	.0256	.0372	.0473	.....
14	.24933	.00668	.0143	.0276	.0401	.0510	.....
15	.26795	.00718	.0154	.0297	.0431	.0549	.....
16	.28675	.00768	.0165	.0318	.0462	.0588	.....
17	.30573	.00819	.0176	.0339	.0493	.0627	.....
18	.32492	.00871	.0187	.0361	.0523	.0666	.....
19	.34433	.00922	.0198	.0382	.0554	.0705	.....
20	.36397	.00975	.0209	.0404	.0586	.0746	.....
21	.38386	.01029	.0221	.0426	.0618	.0787	.....
22	.40403	.01083	.0233	.0448	.0650	.0828	.....
23	.42447	.01137	.0244	.0471	.0687	.0869	.....
24	.44523	.01193	.0255	.0494	.0716	.0912	.....
25	.46631	.01250	.0268	.0517	.0750	.0955	.....
26	.48773	.01307	.0281	.0542	.0786	.1000	.....
27	.50953	.01634	.0293	.0565	.0819	.1043	.....
28	.53171	.01425	.0306	.0590	.0856	.1091	.....
29	.55431	.01486	.0319	.0615	.0892	.1136	.....
30	.57735	.01547	.0332	.0640	.0929	.1183	.....
31	.60086	.01610	.0346	.0667	.0968	.1232	.....
32	.62487	.01675	.0359	.0694	.1006	.1281	.....
33	.64941	.01741	.0374	.0720	.1045	.1330	.....
34	.67451	.01835	.0388	.0748	.1085	.1382	.....
35	.70021	.01877	.0403	.0777	.1127	.1435	.....
36	.72654	.01947	.0418	.0806	.1169	.1488	.....
37	.75355	.02020	.0434	.0836	.1212	.1544	.....
38	.78129	.02094	.0450	.0867	.1257	.1601	.....
39	.80978	.02170	.0466	.0899	.1304	.1660	.....
40	.83910	.02249	.0483	.0931	.1351	.1720	.....
41	.86929	.0233	.0500	.0964	.1399	.1781	.....
42	.90040	.0241	.0518	.0999	.1449	.1845	.....
43	.93252	.0250	.0537	.1034	.1500	.1911	.....
44	.96569	.0259	.0556	.1071	.1554	.1978	.....
45	1.00000	.0268	.0576	.1107	.1608	.2049	.....

Correct Feed per one Revolution of Head Spindle =

$$\frac{\text{Tan. of Angle}}{\text{Feed Pulley Const.}} \times \frac{\text{Feed Pulley}}{\text{Counter Drum}}$$

TABLE 4.—FOR FINDING THE CORRECT FEED PER REVOLUTION OF SPINDLE OR THE DIAMETER OF FEED PULLEY, FOR ANY GIVEN CAM ANGLE. NO. 0 MACHINE.

Digitized by Google

P. & W. No. 1 Automatic		TANGENT OF ANGLE / FEED PULLEY CONSTANT					
		RATIOS					
Degrees	Tangent	24:1	11.16:1	5.81:1	4:1	3.1:1	2.7:1
		Feed Pulley Const. 12.7	Feed Pulley Const. 5.91	Feed Pulley Const. 3.07	Feed Pulley Const. 2.18	Feed Pulley Const. 1.64	Feed Pulley Const. 1.43
1	.01746	.00137	.00295	.00568	.00800	.01064	.01220
1½	.02619	.00206	.00443	.00853	.01201	.01596	.01831
2	.03492	.00274	.00591	.01137	.01601	.02129	.02441
2½	.04366	.00343	.00738	.01422	.02002	.02662	.03053
3	.05241	.00412	.00886	.01707	.02404	.03195	.03665
4	.06993	.00550	.01183	.02277	.03207	.04264	.04897
5	.08749	.00688	.01480	.02849	.04013	.05334	.06118
6	.10510	.00827	.01778	.03423	.04821	.06408	.07350
7	.12278	.00966	.02077	.04000	.05401	.07608	.08586
8	.14054	.01106	.02378	.04577	.06447	.08569	.09828
9	.15838	.01247	.02679	.05158	.07265	.09655	.11075
10	.17633	.01388	.02983	.05687	.08000	.10648	.12200
11	.19438	.01530	.03289	.06331	.08916	.11852	.13593
12	.21256	.01673	.03596	.06923	.09750	.12961	.14864
13	.23087	.01817	.03906	.07520	.10590	.14077	.16144
14	.24933	.01963	.04218	.08122	.11437	.15203	.17435
15	.26795	.02109	.04533	.08728	.12291	.16338	.18737
16	.28675	.02257	.04851	.09340	.13153	.17487	.20053
17	.30573	.02407	.05173	.09959	.14024	.18642	.21380
18	.32492	.02558	.05494	.10583	.15863	.19812	.22721
19	.34433	.02711	.05995	.11216	.15795	.20996	.24078
20	.36397	.02865	.06158	.11855	.16695	.22193	.25453
21	.38386	.03022	.06495	.12503	.17608	.23406	.26843
22	.40403	.03181	.06836	.13160	.18533	.24635	.28253
23	.42447	.03342	.07182	.13826	.19470	.25882	.29613
24	.44523	.03505	.07533	.14502	.20423	.27148	.31135
25	.46631	.03671	.07890	.15189	.21390	.28433	.32609
26	.48773	.03761	.08252	.15887	.22372	.29739	.34107
27	.50953	.04012	.08621	.16600	.23373	.31069	.35631
28	.53171	.04186	.08996	.17319	.24390	.32421	.37183
29	.55431	.04364	.09379	.18055	.25427	.33800	.38763
30	.57735	.04545	.09769	.18805	.26483	.35201	.40374
31	.60086	.04731	.10166	.19572	.27562	.36637	.42018
32	.62487	.04920	.10573	.20354	.28633	.38101	.43697
33	.64941	.05113	.10988	.21153	.29789	.39598	.45413
34	.67451	.05311	.11413	.21971	.30941	.41128	.47168
35	.70021	.05513	.11837	.22808	.32119	.42695	.48965
36	.72654	.05720	.12293	.23665	.33327	.44301	.50807
37	.75355	.05870	.12750	.24545	.34566	.45945	.52695
38	.78129	.06151	.13219	.25449	.35839	.47639	.54635
39	.80978	.06297	.13701	.26377	.37147	.49376	.56628
40	.83910	.06607	.14198	.27332	.38491	.51164	.58678
41	.86929	.06844	.14709	.28315	.39876	.53005	.60789
42	.90040	.07089	.15218	.29329	.41302	.54902	.62965
43	.93252	.07342	.15778	.30375	.42730	.56861	.65211
44	.96569	.07525	.16338	.31455	.44297	.58884	.67531
45	1.00000	.07881	.16920	.32573	.45871	.60975	.69930

Correct Feed per one Revolution of Head Spindle =

$$\frac{\text{Tan. of Angle}}{\text{Feed Pulley Const.}} \times \frac{\text{Feed Pulley}}{\text{Counter Drum}}$$

TABLE 5.—FOR FINDING THE CORRECT FEED PER REVOLUTION OF SPINDLE OR THE DIAMETER OF FEED PULLEY, FOR ANY GIVEN CAM ANGLE. NO. 1 MACHINE.

Digitized by Google

P. & W. No. 2 Automatic		TANGENT OF ANGLE / FEED PULLEY CONSTANT					
		RATIOS					
Degrees	Tangent	24:1 Feed Pulley Const. 16.9	11.16:1 Feed Pulley Const. 7.86	5.8:1 Feed Pulley Const. 4.08	4:1 Feed Pulley Const. 2.81	3:1 Feed Pulley Const. 2.11	2.6:1 Feed Pulley Const. 1.83
1	.01746	.00103	.0022	.0042	.0061	.0081	.0093
1½	.02619	.00154	.0033	.0064	.0093	.0123	.0142
2	.03492	.00206	.0044	.0086	.0125	.0166	.0191
2½	.04366	.00257	.0055	.0105	.0153	.0204	.0234
3	.05241	.00310	.0066	.0127	.0185	.0246	.0283
4	.06993	.00413	.0089	.0172	.0249	.0332	.0382
5	.08749	.00517	.0110	.0213	.0310	.0412	.0474
6	.10510	.00621	.0133	.0257	.0374	.0500	.0572
7	.12278	.00726	.0156	.0301	.0438	.0583	.0670
8	.14054	.00831	.0178	.0343	.0498	.0664	.0763
9	.15838	.00937	.0201	.0387	.0562	.0749	.0861
10	.17633	.01043	.0224	.0431	.0627	.0834	.0959
11	.19438	.01150	.0246	.0475	.0691	.0913	.1057
12	.21256	.01257	.0269	.0519	.0755	.1005	.1155
13	.23087	.01366	.0293	.0566	.0822	.1095	.1259
14	.24933	.01475	.0316	.0610	.0886	.1180	.1357
15	.26795	.01585	.0340	.0657	.0954	.1270	.1461
16	.28675	.01696	.0364	.0703	.1022	.1360	.1564
17	.30573	.01809	.0389	.0750	.1089	.1450	.1668
18	.32492	.01922	.0413	.0796	.1157	.1541	.1771
19	.34433	.02037	.0437	.0843	.1225	.1631	.1875
20	.36397	.02153	.0462	.0892	.1296	.1725	.1984
21	.38386	.02271	.0488	.0941	.1367	.1820	.2093
22	.40403	.02390	.0513	.0990	.1438	.1915	.2202
23	.42447	.02511	.0538	.1039	.1509	.2010	.2311
24	.44523	.02693	.0565	.1090	.1584	.2109	.2425
25	.46631	.02759	.0592	.1142	.1659	.2209	.2540
26	.48773	.02885	.0620	.1197	.1737	.2313	.2660
27	.50953	.03014	.0646	.1247	.1812	.2413	.2774
28	.53171	.03146	.0676	.1303	.1894	.2522	.2899
29	.55431	.03279	.0704	.1357	.1972	.2626	.3019
30	.57735	.03416	.0733	.1414	.2054	.2735	.3145
31	.60086	.03555	.0763	.1472	.2140	.2849	.3275
32	.62487	.03697	.0794	.1531	.2235	.2963	.3406
33	.64941	.03842	.0824	.1590	.2310	.3076	.3537
34	.67451	.03991	.0856	.1651	.2399	.3195	.3673
35	.70021	.04143	.0889	.1715	.2492	.3318	.3815
36	.72654	.04299	.0922	.1779	.2585	.3431	.3957
37	.75355	.04458	.0956	.1845	.2681	.3569	.4104
38	.78129	.04623	.0992	.1913	.2780	.3702	.4256
39	.80978	.04791	.1029	.1985	.2882	.3839	.4415
40	.83910	.04965	.1066	.2056	.2987	.3977	.4573
41	.86929	.0514	.1104	.2129	.3094	.4119	.4776
42	.90040	.0533	.1143	.2205	.3204	.4266	.4905
43	.93252	.0552	.1184	.2283	.3318	.4418	.5079
44	.96569	.0572	.1226	.2364	.3435	.4574	.5259
45	1.00000	.0592	.1272	.2450	.3560	.4740	.5450

Correct Feed per one Revolution of Head Spindle =

$$\frac{\text{Tan of Angle}}{\text{Feed Pulley Const.}} \times \frac{\text{Feed Pulley}}{\text{Counter Drum}}$$

TABLE 6.—FOR FINDING THE CORRECT FEED PER REVOLUTION OF SPINDLE OR THE DIAMETER OF FEED PULLEY, FOR ANY GIVEN CAM ANGLE. NO. 2 MACHINE.

Digitized by Google

P. & W. No. 3 Automatic (open belt)		TANGENT OF ANGLE / FEED PULLEY CONSTANT					
		RATIOS					
Degrees	Tangent	58:1	21.9:1	16.1:1	8.19:1	5.7:1	4.2:1
		Feed Pulley Const. 32.9	Feed Pulley Const. 12.4	Feed Pulley Const. 9.13	Feed Pulley Const. 4.65	Feed Pulley Const. 3.23	Feed Pulley Const. 2.38
1	.01746	.00053	.00137	.00186	.00365	.00526	.00714
1½	.02619	.00079	.00209	.00285	.00559	.00805	.01092
2	.03492	.00106	.00282	.00383	.00752	.01083	.01470
2½	.04366	.00132	.00346	.00471	.00924	.01331	.01806
3	.05241	.00159	.00419	.00569	.01118	.01610	.02184
4	.06993	.00212	.00564	.00766	.01505	.02167	.02940
5	.08749	.00265	.00701	.00953	.01870	.02693	.03654
6	.10510	.00319	.00846	.01149	.02257	.03250	.04410
7	.12278	.00373	.00991	.01347	.02644	.03808	.05166
8	.14054	.00427	.01128	.01533	.03010	.04334	.05880
9	.15838	.00481	.01273	.01730	.03397	.04891	.06636
10	.17633	.00535	.01418	.01927	.03784	.05448	.07392
11	.19438	.00590	.01564	.02124	.04171	.06006	.08148
12	.21256	.00646	.01709	.02321	.04558	.06563	.08904
13	.23087	.00701	.01862	.02529	.04966	.07151	.09702
14	.24933	.00757	.02007	.02726	.05353	.07709	.10458
15	.26795	.00814	.02160	.02934	.05762	.08297	.11256
16	.28675	.00871	.02313	.03142	.06170	.08885	.12054
17	.30573	.00929	.02466	.03351	.06579	.09473	.12852
18	.32492	.00987	.02619	.03558	.06987	.10062	.13650
19	.34433	.01046	.02773	.03767	.07396	.10650	.14448
20	.36397	.01106	.02934	.03986	.07826	.11299	.15288
21	.38386	.01166	.03095	.04205	.08256	.11888	.16128
22	.40403	.01228	.03256	.04424	.08686	.12507	.16968
23	.42447	.01290	.03417	.04643	.09116	.13127	.17808
24	.44523	.01353	.03587	.04873	.09567	.13777	.18690
25	.46631	.01414	.03756	.05103	.10019	.14427	.19572
26	.48773	.01482	.03933	.05344	.10492	.15108	.20496
27	.50953	.01548	.04102	.05573	.10943	.15758	.21378
28	.53171	.01616	.04288	.05825	.11438	.16470	.22344
29	.55431	.01684	.04465	.06066	.11911	.17151	.23268
30	.57735	.01754	.04651	.06318	.12405	.17864	.24234
31	.60086	.01826	.04844	.06581	.12921	.18607	.25242
32	.62487	.01896	.05037	.06844	.13437	.19350	.26250
33	.64941	.01973	.05231	.07106	.13953	.20093	.27258
34	.67451	.02050	.05432	.07380	.14491	.20867	.28308
35	.70021	.02127	.05642	.07665	.15050	.21672	.29400
36	.72654	.02208	.05852	.07949	.15609	.22477	.30492
37	.75355	.02290	.06069	.08245	.16189	.23312	.31626
38	.78129	.02374	.06295	.08552	.16791	.24179	.32802
39	.80978	.02461	.06529	.08869	.17415	.25077	.34020
40	.83910	.02550	.06762	.09187	.18038	.25975	.35238
41	.86929	.02642	.07004	.09515	.18683	.26804	.36498
42	.90040	.02736	.07254	.09855	.19350	.27864	.37800
43	.93252	.02833	.07512	.10205	.20038	.28854	.39144
44	.96569	.02934	.07778	.10566	.20747	.29876	.40530
45	1.00000	.03040	.08060	.10950	.21500	.30960	.42000

Correct Feed per one Revolution of Head Spindle =

$$\frac{\text{Tan of Angle}}{\text{Feed Pulley Const.}} \times \frac{\text{Feed Pulley}}{\text{Counter Drum}}$$

TABLE 7.—FOR FINDING THE CORRECT FEED PER REVOLUTION OF SPINDLE OR THE DIAMETER OF FEED PULLEY, FOR ANY GIVEN CAM ANGLE. NO. 3 MACHINE.

Digitized by Google

STEEL CUTTING FEED PER REVOLUTION OF SPINDLE.

P. & W. No. 0 Automatic Screw Machine.

Angle of Cam. Degree.	For 9″ Counter Drum. Spindle Speeds 905–664–540.				For 12″ Counter Drum. Spindle Speeds 1207–886–720.				For 14″ Counter Drum. Spindle Speeds 1408–1033–840.			
	Diameter of Feed Pulley.				Diameter of Feed Pulley.				Diameter of Feed Pulley.			
	2″	3″	4″	5″	2″	3″	4″	5″	2″	3″	4″	5″
3	.00076	.00114	.00152	.00191	.00057	.00086	.00114	.00143	.00049	.00073	.00098	.00122
4	.00102	.00153	.00203	.00254	.00076	.00114	.00153	.00191	.00065	.00098	.00131	.00163
5	.00127	.00191	.00254	.00318	.00095	.00143	.00191	.00239	.00082	.00123	.00164	.00205
6	.00153	.00229	.00306	.00382	.00115	.00172	.00229	.00287	.00098	.00147	.00197	.00246
7	.00179	.00268	.00357	.00446	.00134	.00201	.00268	.00335	.00115	.00172	.00230	.00287
8	.00204	.00307	.00409	.00511	.00153	.00230	.00307	.00383	.00131	.00197	.00263	.00328
9	.00230	.00346	.00461	.00576	.00173	.00259	.00346	.00432	.00148	.00222	.00296	.00370
10	.00256	.00385	.00513	.00641	.00192	.00288	.00385	.00481	.00165	.00247	.00330	.00412
11	.00283	.00424	.00566	.00707	.00212	.00318	.00424	.00530	.00182	.00273	.00363	.00454
12	.00309	.00464	.00618	.00773	00232	.00348	.00464	.00579	.00199	.00298	.00397	.00497
13	.00336	.00504	.00672	.00839	.00252	.00378	.00504	.00629	.00216	.00323	.00432	.00539
14	.00363	.00544	.00725	.00906	.00272	.00408	.00544	.00680	.00233	.00350	.00466	.00583
15	.00390	.00585	.00780	.00974	.00292	.00438	.00584	.00730	.00251	.00376	.00501	.00626
16	.00417	.00625	.00834	.01042	.00313	.00469	.00626	.00782	.00268	.00402	.00536	.00670
18	.00473	.00709	.00945	.01181	.00354	.00532	.00709	.00886	.00304	.00456	.00608	.00759
20	.00529	.00794	.01059	.01323	.00397	.00595	.00794	.00992	.00340	.00511	.00681	.00851
22	.00588	.00881	.01175	.01469	.00441	.00661	.00882	.01102	.00378	.00567	.00756	.00944
24	.00647	.00971	.01295	.01618	.00486	.00728	.00971	.01214	.00416	.00624	.00832	.01040
25	.00678	.01017	.01356	.01695	.00509	.00763	.01017	.01271	.00436	.00654	.00872	.01090
26	.00709	.01064	.01419	.01773	.00532	.00798	.01064	.01330	.00456	.00684	.00912	.01140
28	.00773	.01160	.01547	.01933	.00580	.00870	.01160	.01450	.00497	.00746	.00994	.01243
30	.00840	.01260	.01680	.02099	.00630	.00945	.01260	.01574	.00540	.00810	.01080	.01349
32	.00909	.01363	.01818	.02272	.00682	.01022	.01363	.01704	.00584	.00876	.01168	.01460
34	.00981	.01471	.01962	.02452	.00736	.01104	.01472	.01839	.00631	.00946	.01261	.01576
35	.01018	.01528	.02037	.02546	.00764	.01146	.01528	.01909	.00655	.00982	.01309	.01636

Table 8.—Automatic Screw Machine Feeds, Pratt & Whitney No. 0 Machine (24 to 1 Feed Motion.)

Digitized by Google

STEEL CUTTING FEED PER REVOLUTION OF SPINDLE.

P. & W. No. 1 Regular and No. 1 Special Automatic Screw Machines.

Angle of Cam. Degree.	For 11″ Counter Drum Spindle Speeds 653–496–396.				For 12″ Counter Drum Spindle Speeds 713–541–432.				For 14″ Counter Drum Spindle Speeds 832–631–504.				For 16″ Counter Drum Spindle Speeds 950–722–576.			
	Diameter of Feed Pulley.				Diameter of Feed Pulley.				Diameter of Feed Pulley.				Diameter of Feed Pulley.			
	3″	4″	5″	6″	3″	4″	5″	6″	3″	4″	5″	6″	3″	4″	5″	6″
3	.00110	.00147	.00184	.00221	.00101	.00135	.00169	.00202	.00087	.00116	.00145	.00173	.00076	.00101	.00126	.00152
4	.00147	.00196	.00245	.00295	.00135	.00180	.00225	.00270	.00116	.00154	.00193	.00231	.00101	.00135	.00169	.00202
5	.00184	.00246	.00307	.00369	.00169	.00225	.00282	.00337	.00145	.00193	.00241	.00289	.00127	.00169	.00211	.00253
6	.00221	.00295	.00369	.00443	.00203	.00271	.00338	.00406	.00174	.00232	.00290	.00348	.00152	.00203	.00254	.00304
7	.00259	.00345	.00431	.00517	.00237	.00316	.00395	.00474	.00203	.00271	.00339	.00406	.00178	.00237	.00296	.00355
8	.00296	.00395	.00493	.00592	.00271	.00362	.00452	.00543	.00233	.00310	.00388	.00465	.00204	.00271	.00339	.00407
9	.00334	.00445	.00556	.00667	.00306	.00408	.00509	.00611	.00262	.00350	.00437	.00524	.00229	.00306	.00382	.00459
10	.00371	.00495	.00619	.00743	.00340	.00454	.00567	.00681	.00292	.00389	.00486	.00584	.00255	.00340	.00426	.00511
11	.00409	.00546	.00682	.00819	.00375	.00500	.00625	.00751	.00322	.00429	.00536	.00643	.00281	.00475	.00469	.00563
12	.00448	.00597	.00746	.00895	.00410	.00547	.00684	.00821	.00352	.00469	.00586	.00704	.00308	.00410	.00513	.00615
13	.00486	.00648	00810	.00973	00446	.00594	.00743	.00890	.00382	.00510	.00637	.00764	.00334	.00445	.00557	.00668
14	.00525	.00700	.00875	.01051	.00481	.00642	.00802	.00963	.00412	.00550	.00687	.00825	.00361	.00482	.00602	.00722
15	.00564	.00752	.00940	.01129	.00517	.00690	.00862	.01035	.00443	.00591	.00739	.00887	.00388	.00517	.00646	.00776
16	.00604	.00805	.01006	.01208	.00554	.00738	.00923	.01108	.00475	.00633	.00791	.00949	.00415	.00554	.00692	.00830
18	.00684	.00912	.01140	.01369	.00627	.00836	.01045	.01255	.00538	.00717	.00896	.01075	.00470	.00627	.00784	.00941
20	.00767	.01022	.01278	.01534	.00703	.00937	.01171	.01406	.00602	.00803	.01004	.01205	.00527	.00703	.00878	.01054
22	.00851	.01135	.01418	.01702	.00780	.01040	.01300	.01560	.00669	.00892	.01114	.01337	.00585	.00780	.00975	.01170
24	.00938	.01250	.01563	.01876	.00860	.01146	.01433	.01720	.00737	.00983	.01228	.01474	.00645	.00860	.01074	.01289
25	.00982	.01310	.01637	.01964	.00900	.01200	.01500	.01801	.00772	.01029	.01286	.01543	.00675	.00900	.01125	.01351
26	.01027	.01370	.01712	.02055	.00942	.01256	.01569	.01883	.00807	.01076	.01345	.01615	.00706	.00942	.01177	.01412
28	.01120	.01493	.01866	.02240	.01027	.01369	.01711	.02053	.00880	.01173	.01466	.01760	.00770	.01027	.01283	.01540
30	.01216	.01622	.02027	.02432	.01115	.01486	.01858	.02230	.00955	.01274	.01592	.01911	.00836	.01151	.01393	.01672
32	.01316	.01755	.02193	.02632	.01207	.01609	.02011	.02413	.01034	.01379	.01723	.02068	.00905	.01206	.01508	.01810
34	.01421	.01894	.02368	.02842	.01302	.01736	.02170	.02605	.01116	.01488	.01860	.02233	.00977	.01302	.01628	.01954
35	.01475	.01966	.02458	.02949	.01352	.01803	.02253	.02704	.01159	.01545	.01931	.02318	.01014	.01352	.01690	.02028

Table 9.—Automatic Screw Machine Feeds, Pratt & Whitney No. 1 Machine (24 to 1 Feed Motion).

Digitized by Google

STEEL CUTTING FEED PER REVOLUTION OF SPINDLE.

P. & W. No. 2 Regular and No. 2 Special Automatic Screw Machines.

Angle of Cam. Degree.	For 12″ Counter Drum. Spindle Speeds 603–426–316.				For 14″ Counter Drum. Spindle Speeds 703–497–369.				For 16″ Counter Drum. Spindle Speeds 804–568–422.			
	Diameter of Feed Pulley.				Diameter of Feed Pulley.				Diameter of Feed Pulley.			
	3″	4″	5″	6″	3″	4″	5″	6″	3″	4″	5″	6″
3	.00076	.00102	.00127	.00152	.00065	.00087	.00109	.00131	.00057	.00076	.00095	.00114
4	.00102	.00136	.00169	.00203	.00087	.00116	.00145	.00174	.00076	.00102	.00127	.00153
5	.00127	.00170	.00212	.00255	.00109	.00145	.00182	.00218	.00095	.00127	.00159	.00191
6	.00153	.00204	.00255	.00306	.00131	.00175	.00218	.00262	.00115	.00153	.00191	.00229
7	.00179	.00238	.00298	.00357	.00153	.00204	.00255	.00306	.00134	.00178	.00223	.00268
8	.00204	.00273	.00341	.00409	.00175	.00234	.00292	.00350	.00153	.00204	.00255	.00307
9	.00230	.00307	.00384	.00461	.00198	.00263	.00329	.00395	.00173	.00230	.00288	.00346
10	.00256	.00342	.00427	.00513	.00220	.00293	.00366	.00440	.00192	.00256	.00320	.00385
11	.00283	.00377	.00471	.00565	.00242	.00323	.00404	.00485	.00212	.00283	.00353	.00424
12	.00309	.00412	.00515	.00618	.00265	.00353	.00442	.00530	.00232	.00309	.00386	.00464
13	.00336	.00448	.00559	.00671	.00288	.00384	.00480	.00576	.00252	.00336	.00420	.00504
14	.00363	.00484	.00604	.00725	.00311	.00414	.00518	.00622	.00272	.00363	.00453	.00544
15	.00390	.00520	.00649	.00779	.00334	.00445	.00556	.00668	.00292	.00390	.00487	.00584
16	.00417	.00556	.00695	.00834	.00358	.00477	.00596	.00715	.00313	.00417	.00521	.00626
18	.00472	.00630	.00787	.00945	.00405	.00540	.00675	.00810	.00354	.00472	.00590	.00709
20	.00529	.00706	.00882	.01059	.00454	.00605	.00756	.00907	.00397	.00529	.00661	.00794
22	.00588	.00784	.00979	.01175	.00504	.00672	.00839	.01007	.00441	.00588	.00734	.00881
24	.00648	.00864	.01079	.01295	.00555	.00740	.00925	.01110	.00486	.00648	.00809	.00971
25	.00678	.00904	.01130	.01357	.00581	.00775	.00969	.01163	.00509	.00678	.00848	.01018
26	.00709	.00946	.01182	.01419	.00608	.00811	.01013	.01216	.00532	.00709	.00886	.01064
28	.00773	.01031	.01289	.01546	.00663	.00884	.01105	.01326	.00580	.00773	.00966	.01160
30	.00840	.01120	.01399	.01679	.00720	.00960	.01199	.01439	.00630	.00840	.01049	.01259
32	.00909	.01212	.01514	.01817	.00779	.01039	.01298	.01558	.00682	.00909	.01136	.01363
34	.00981	.01308	.01635	.01962	.00841	.01121	.01401	.01682	.00736	.00981	.01226	.01472
35	.01021	.01361	.01701	.02042	.00873	.01164	.01455	.01746	.00763	.01018	.01273	.01528

Table 10.—Automatic Screw Machine Feeds, Pratt & Whitney No. 2 Machine (24 to 1 Feed Motion).

Digitized by Google

STEEL CUTTING FEED PER REVOLUTION OF SPINDLE.

P. & W. No. 3 Regular Automatic Screw Machine. Plain Head.

Angle of Cam. Degree.	For 12″ Counter Drum. Spindle Speeds 177–134–94. Diameter of Feed Pulley.				For 14″ Counter Drum. Spindle Speeds 206–156–110. Diameter of Feed Pulley.				For 16″ Counter Drum. Spindle Speeds 236–179–125. Diameter of Feed Pulley.				For 18″ Counter Drum. Spindle Speeds 265–201–141. Diameter of Feed Pulley.			
	7″	8″	9″	10″	7″	8″	9″	10″	7″	8″	9″	10″	7″	8″	9″	10″
3	.00093	.00106	.00119	.00133	.00080	.00091	.00102	.00114	.00069	.00080	.00090	.00100	.00062	.00071	.00080	.00088
4	.00124	.00142	.00159	.00177	.00106	.00121	.00137	.00152	.00093	.00106	.00119	.00132	.00083	.00094	.00106	.00118
5	.00155	.00177	.00199	.00222	.00133	.00152	.00171	.00190	.00116	.00133	.00150	.00166	.00103	.00118	.00133	.00148
6	.00186	.00213	.00240	.00266	.00160	.00182	.00205	.00228	.00140	.00160	.00180	.00200	.00124	.00142	.00160	.00177
7	.00218	.00249	.00280	.00311	.00187	.00213	.00240	.00266	.00163	.00187	.00210	.00233	.00145	.00166	.00187	.00207
8	.00249	.00285	.00320	.00356	.00214	.00244	.00275	.00305	.00187	.00214	.00240	.00267	.00166	.00190	.00214	.00237
9	.00281	.00321	.00361	.00401	.00241	.00275	.00309	.00344	.00211	.00241	.00271	.00301	.00187	.00214	.00241	.00267
10	.00313	.00357	.00402	.00446	.00268	.00306	.00344	.00383	.00234	.00268	.00301	.00335	.00208	.00238	.00268	.00298
11	.00345	.00394	.00443	.00492	.00295	.00338	.00380	.00422	.00258	.00295	.00332	.00369	.00230	.00263	.00295	.00328
12	.00377	.00431	.00484	.00538	.00323	.00369	.00415	.00461	.00283	.00323	.00363	.00404	.00251	.00287	.00323	.00359
13	.00409	.00468	.00526	.00585	.00351	.00401	.00451	.00501	.00307	.00351	.00395	.00438	.00273	.00312	.00351	.00390
14	.00442	.00505	.00568	.00631	.00379	.00433	.00487	.00541	.00332	.00379	.00426	.00474	.00295	.00337	.00379	.00421
15	.00475	.00543	.00611	.00678	.00407	.00465	.00523	.00582	.00356	.00407	.00458	.00509	.00317	.00362	.00407	.00452
16	.00508	.00581	.00653	.00726	.00436	.00498	.00560	.00622	.00381	.00436	.00490	.00545	.00339	.00387	.00436	.00484
18	.00576	.00658	.00741	.00823	.00494	.00564	.00634	.00705	.00433	.00494	.00555	.00617	.00384	.00439	.00494	.00549
20	.00645	.00737	.00830	.00922	.00553	.00632	.00711	.00790	.00484	.00553	.00622	.00691	.00430	.00491	.00553	.00614
22	.00716	.00818	.00921	.01023	.00614	.00702	.00789	.00877	.00537	.00614	.00691	.00767	.00478	.00546	.00614	.00682
24	.00790	00902	.01015	.01128	.00676	.00773	.00870	.00966	.00592	.00676	.00761	.00846	.00526	.00601	.00676	.00752
25	.00827	.00945	.01063	.01181	.00708	.00810	.00911	.01012	.00620	.00708	.00797	.00886	.00551	.00630	.00708	.00787
26	.00864	.00988	.01111	.01235	.00741	.00847	.00953	.01059	.00648	.00741	.00834	.00926	.00576	.00659	.00741	.00823
28	.00942	.01077	.01211	.01346	.00808	.00923	.01039	.01154	.00707	.00808	.00909	.01010	.00628	.00718	.00808	.00898
30	.01023	.01170	.01316	.01462	.00877	.01002	.01128	.01253	.00768	.00877	.00986	.01096	.00682	.00780	.00877	.00975
32	.01107	.01266	.01424	.01582	.00949	.01085	.01220	.01356	.00831	.00950	.01068	.01187	.00738	.00844	.00949	.01055
34	.01196	.01366	.01537	.01708	.01025	.01171	.01318	.01464	.00897	.01025	.01153	.01281	.00797	.00911	.01025	.01139
35	.01241	.01418	.01596	.01773	.01064	.01216	.01368	.01520	.00931	.01064	.01197	.01330	.00827	.00946	.01064	.01182

Table 11.—Automatic Screw Machine Feeds, Pratt & Whitney No. 3 Machine (58 to 1 Feed Motion).

Digitized by Google

CHAPTER III

THE BROWN & SHARPE AUTOMATIC SCREW MACHINE

The general design of the automatic screw machine built by the Brown & Sharpe Manufacturing Company, Providence, R. I., is represented in Figs. 26 and 27, the size of machine illustrated in these half-tones being

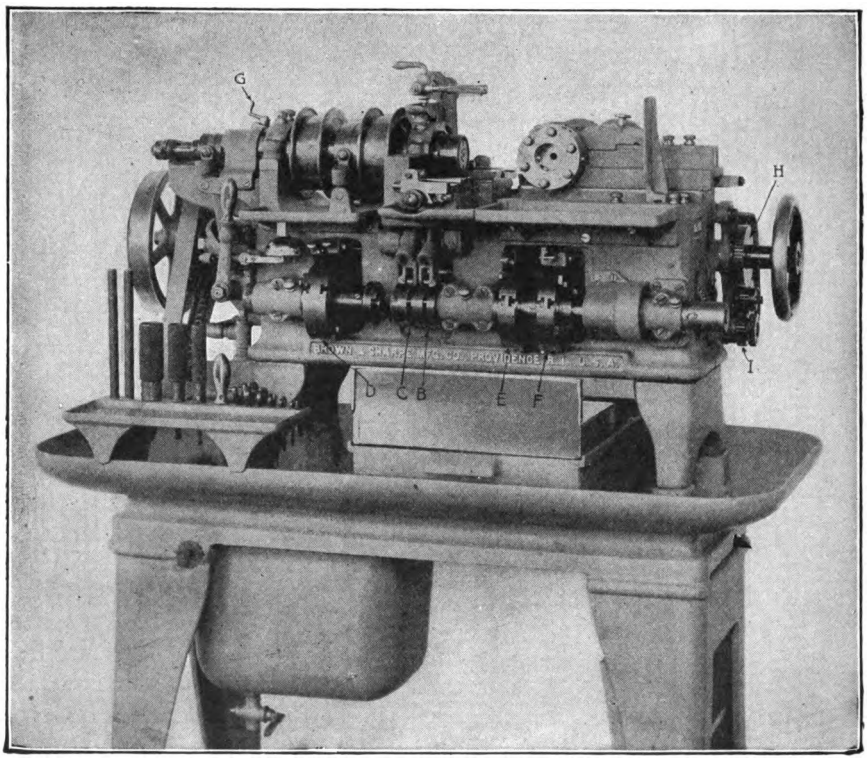

FIG. 26.—Brown & Sharpe No. 00 Automatic screw machine.

the No. 00, which has a maximum chuck capacity of $^{5}/_{16}$ inch, and a maximum feed of 2 inches; the greatest length that it will turn being 1¼ inches. Various features of construction are shown clearly in the line drawings, Figs. 28 to 35. Before taking up the construction of the

Digitized by Google

machine in detail, however, it may be well to outline briefly certain features brought out by the half-tone engravings.

GENERAL PRINCIPLES OF CONSTRUCTION

The system of cams employed on this type of machine was adopted by the Brown & Sharpe Manufacturing Company a number of years ago

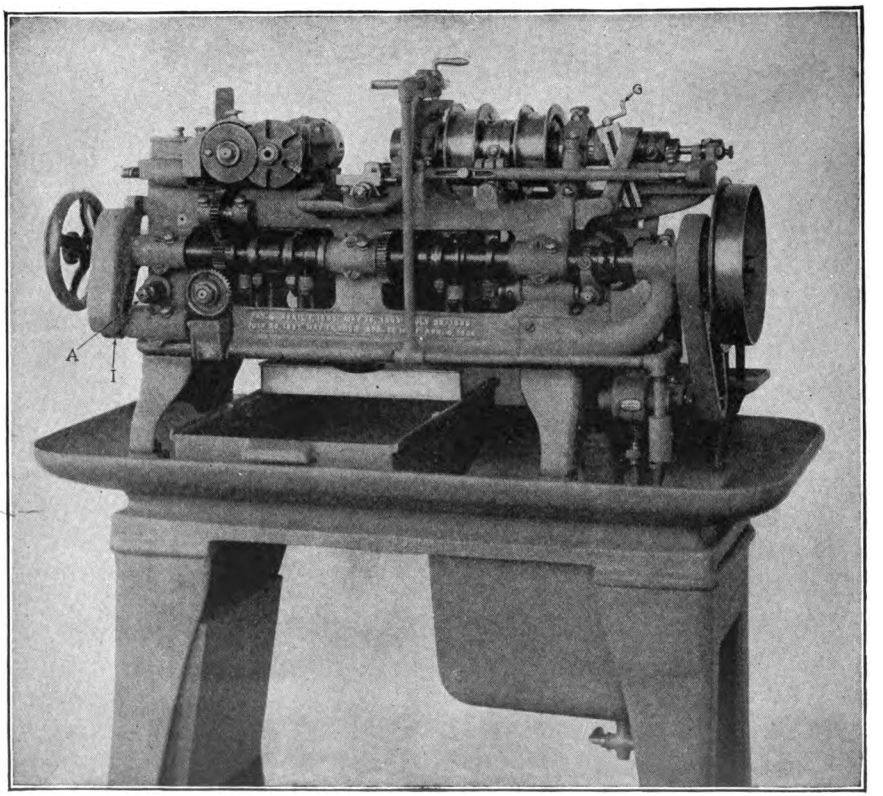

FIG. 27.—Brown & Sharpe automatic screw machine (rear view).

and provides for a set of cams for each piece to be made, so that when a given piece is to be undertaken it is simply necessary to place a set of cams for this piece in position; the machine is then ready to operate, except for the necessary adjustments of the turret tools and cross-slide tools.

The turret is arranged for six tools; there are front and rear cross slides, which are operated by edge cams made from blanks 4½ inches diameter with 1-inch center hole and ¼-inch locating-pin hole. These

Digitized by Google

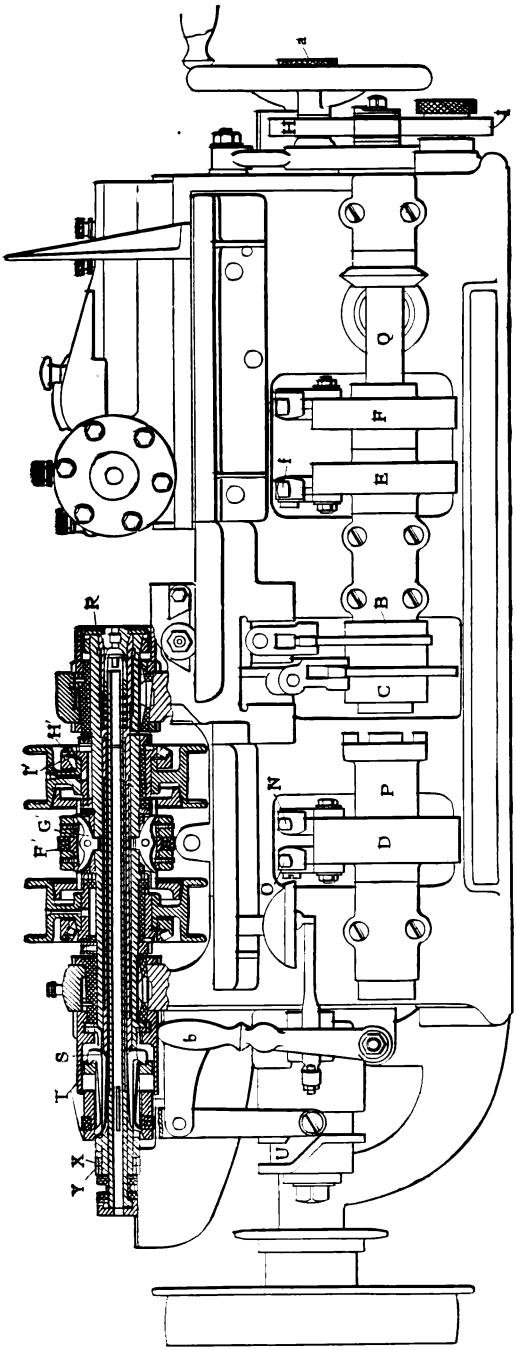

FIG. 28.—Front elevation and section through spindle of Brown & Sharpe automatic screw machine.

Digitized by Google

locating-pin holes are also placed for positioning the cams and insure their being located in the proper position to give correct timing.

The turret-slide cam is carried on shaft *A*, Fig. 27, the end shown being the shank of the clamp nut. This cam is placed on the shaft through an opening in the rear end of the machine, which gives ready access to this adjustment. The cross-slide cams are carried on the front shaft at *B* and *C*, Fig. 26. The dogs for controlling the mechanism for reversing the spindle, opening and closing the chuck, feeding the stock and rotating the turret, can be adjusted on carriers, *D*, *E* and *F*; this feature gives ease of adjustment for all operations within the capacity of the machine. The turret-rotating mechanism draws the turret slide to the rear position when indexing the turret, irrespective of the height of the cam position. This does away with the necessity of cutting the cams back to allow the tools clearance when rotating. The reversing shaft, with carrier *D*, can be uncoupled from the front shaft for the purpose of placing the cross-slide cams on carriers *B* and *C*. The stock feed can be adjusted by crank *G*, and the change gears for obtaining different cam-shaft speeds are mounted on shafts *H* and *I*, the gear marked *H* being the driver and that marked *I* the driven. The latter is mounted on a worm shaft at the rear of the machine, which drives through a worm gear a short shaft running crosswise of the bed to the front of the machine where it is connected by bevel gears with the front shaft or cross-slide cam shaft. It also drives by means of spur gears the shaft *A* on which is carried the turret-slide cam.

THE SPINDLE AND ITS CLUTCHES

The front elevation, Fig. 28, gives a longitudinal section through the spindle and its boxes. This spindle, which has hardened, ground, and lapped bearings, runs in boxes of phosphor bronze, the front box having a tapered exterior, and provision for taking up wear. End play may be taken up by adjusting nuts located at the rear box.

The spindle is driven by friction clutch pulleys having hardened steel bushes and roller bearings operating on the hardened portion of the spindle. Lubricant for the pulleys is supplied from the oil chambers. The friction cones are engaged with the pulleys by sliding sleeve *F'* on levers *G'*. Adjustment for wear is secured by loosening clamp screw *H'* and turning nut *I'*. At *J*, *J*, Fig. 29, is shown a pair of screws by which the clutch sleeves are set central to give equal pressure on the two pulleys.

Digitized by Google

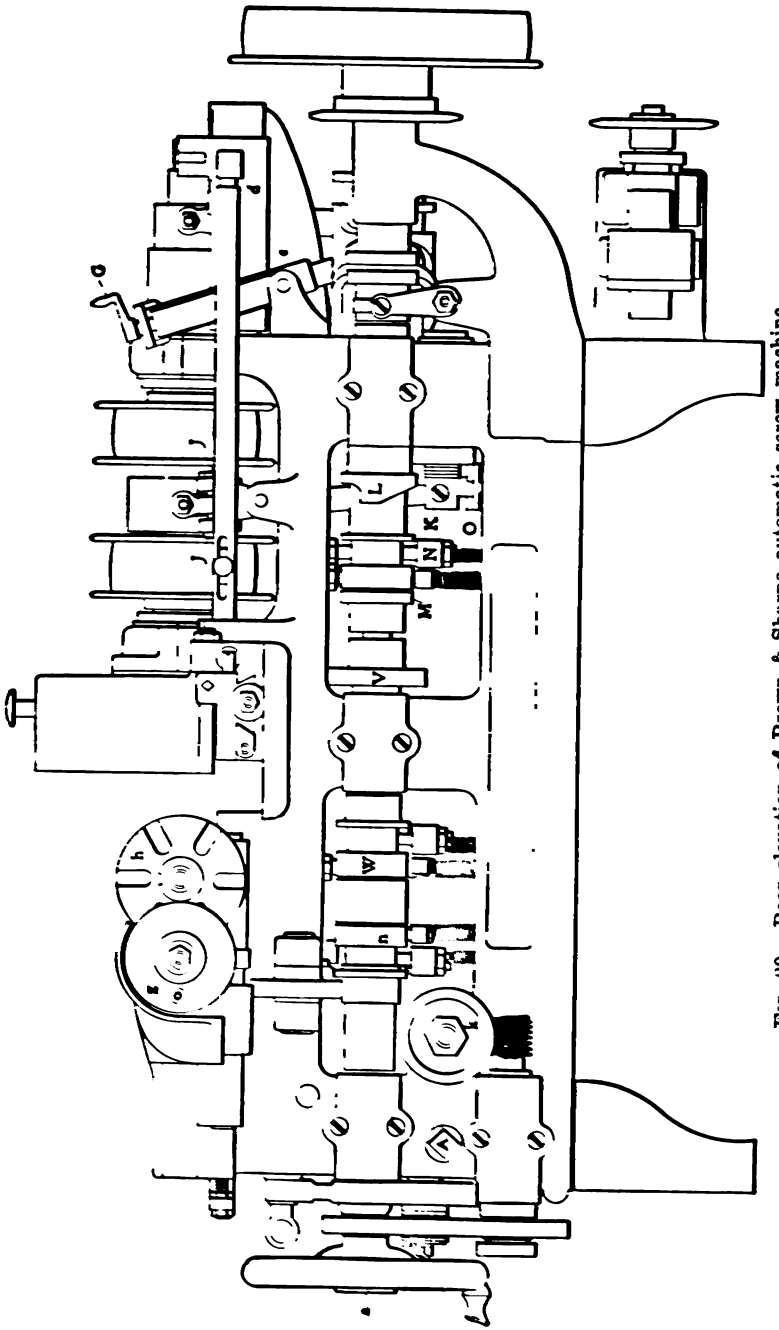

FIG. 29.—Rear elevation of Brown & Sharpe automatic screw machine.

Digitized by Google

THE SPINDLE REVERSE

The reversal of the spindle is secured through the action of spring plunger *K*, Fig. 29, which, upon being released, throws the clutch into instant engagement with the pulley next the chuck. To run forward the clutch is engaged with the other pulley by cam *L*, which is operated by clutch *M*, drawn out at the completion of one revolution by lever *N*. As the spindle is reversed to run forward the plunger spring is compressed by the action of the cam, the plunger being held in place by a wide portion at the rear end of the lever *O*. The carrier *D* shown below levers *N* and *O* in Figs. 26 and 28 is provided with dogs which may be adjusted to lift the levers at the proper time for reversing the spindle. Where work is to be threaded the positive clutch *P* serves to connect the carrier shaft with the front- or cut-off cam shaft *Q*. This clutch, as already stated, is disengaged when the cross-slide cams are to be changed and need not be connected for work which is not to be threaded. The carrier may be provided with two or more sets of dogs where it is necessary both to thread and tap the work or to cut two threads on it.

OPERATION OF THE SPRING COLLET

At *R*, Fig. 28, is shown an internally tapered sleeve which slides over the collet and closes it without end movement of the latter, thus assuring accurate stock feeding regardless of any minute variations in diameter. The operation of the sleeve is effected by the chucking tube extending through the spindle to the rear end, where it is controlled by the chuck levers *S*, which are operated by sleeve *T*, which sleeve is actuated by a lever and cam *U*. The stock is also fed through the medium of this cam, which is itself actuated through spur gears *V*, Fig. 29, and a positive clutch *W* on the driving shaft. The gears and clutch are plainly shown on the shaft in Fig. 27. A lever is shown under this clutch in Fig. 29, and when this is depressed by the dog on carrier *E*, Figs. 26 and 28, the clutch is engaged and makes one complete revolution, after which it is again disengaged by a pin in the lever under the clutch which acts upon the cam surface of the clutch and causes the latter to return to its former position.

Adjustment of the chuck is by means of nut *X*, Fig. 28, which may be turned as required after releasing nut *Y*. The collet is removed by taking off the cap with a pin wrench.

Digitized by Google

THE STOCK FEED

The pulley at the head end of the machine for driving the main feed shaft *a* Figs. 28 and 29, is engaged by a clutch actuated by hand lever *b*, which thus forms a means of controlling the feed at all times.

The rear end of the stock-feed tube in the spindle is connected by a latch *c*, Fig. 30, to slide *d*, Fig. 29, which has a slot in which is a sliding block connecting it to lever *e*, Figs. 29 and 30; this lever is operated by cam *U* already referred to. A screw and crank handle *G* are provided, as indicated in Figs. 26, 27 and 29, for adjusting the sliding block; and lever *e* having a constant stroke the length of feed for the stock is varied

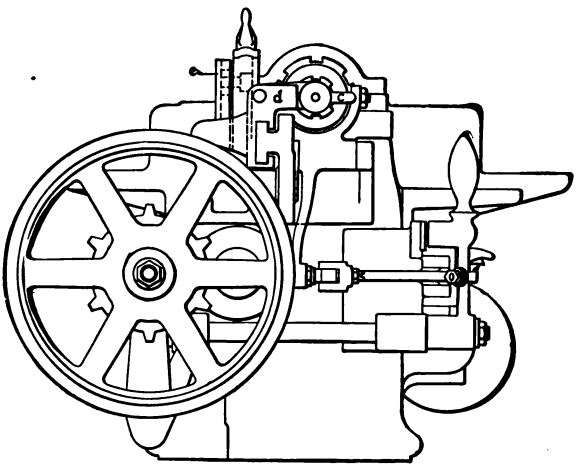

FIG. 30.—End elevation showing chuck operating mechanism.

by changing the position of the sliding block. The length of feed is shown by a scale which is secured to the slide.

By lifting latch *c*, Fig. 30, the feed tube may be withdrawn and the feeding fingers (which are threaded left hand) may be changed. It is, of course, possible to feed more than the regular capacity of the machine by using two or more dogs on the left side of the carrier *E*, Fig. 28, thus operating the feed mechanism several times.

When it is desired to stop the stock feed, as in adjusting tools, the dog attached to lever *f*, Fig. 28, can be turned up, thus allowing the dogs on the carrier *E* beneath to pass without lifting the lever.

THE TURRET SLIDE AND TURRET

As will be observed upon inspection of the various general views, the turret is mounted at the side of the turret slide and rotates in the vertical plane. A long taper shank with which the turret is provided

Digitized by Google

takes a bearing in the turret slide. The indexing movement is accomplished by means of a hardened steel roll in disk *g*, Fig. 29, engaging with grooves cut radially in disk *h*, which is attached to the rear end of the turret spindle. The turret is rotated by this method rapidly and starts and stops without appreciable shock. The taper bolt or pin which locks

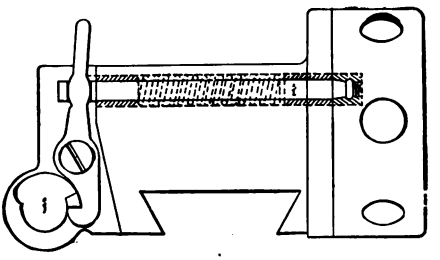

FIG. 31.—End view of turret slide showing locking pin for turret.

the turret in its various positions is shown at *i*, Figs. 31 and 32. The locking bolt is withdrawn from the turret by cam *j*.

TURRET-SLIDE OPERATION

The forward motion of the turret slide for feeding the cutting tools along the work is imparted by a bell-crank lever actuated by the cam

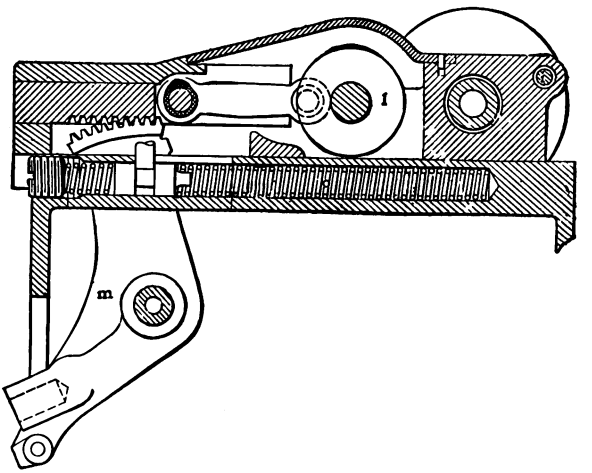

FIG. 32.—Mechanism of turret slide.

mounted on shaft *A*, Figs. 27, 29, and 31, which is itself driven by spur gears from the shaft and worm gear *k*.

While the turret is advancing to the cut and returning after the cut is taken, the movement of the turret slide and the revolving of the turret

Digitized by Google

are controlled independently of the turret-slide feed cam by the crank motion *l*, Fig. 32, while the roll carried by bell-crank lever *m* is passing from the highest point of the cam for the turret-slide feed to the point where the next cut is started. The rapid-motion crank *l* is operated by gears at the rear of the machine which are driven by positive clutch *n*, Fig. 29, on the driving shaft, which clutch is controlled by a lever and suitable mechanism for giving one complete revolution in similar manner to the feed-mechanism control already described. As crank *l* revolves, spring *o* is permitted to return the turret slide without the rack. The turret is then revolved in the manner described, and upon the crank *l* coming to rest after it has completed one full revolution, the machine is ready for the next cutting operation.

THE TWO CROSS SLIDES

The cross slides are shown clearly in Fig. 34. They are operated by cut-off cam shafts *Q*, Figs. 28 and 34, driven from worm-wheel shaft *k*,

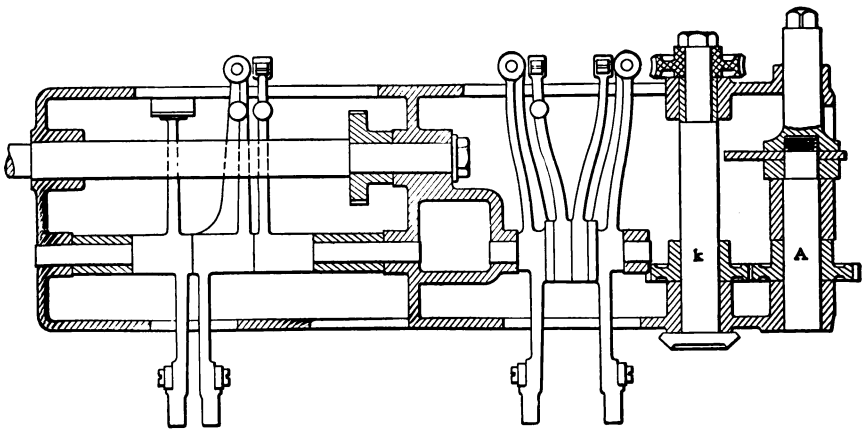

FIG. 33.—Plan showing feed shaft, tripping levers, etc.

Figs. 29 and 33, through the medium of bevel gears. The front slide is operated directly by a lever with gear segment formed at the upper end. The rear slide has an intermediate segment gear to reverse the direction of the movement. The cams for the two slides are conveniently placed side by side on their shaft (as at *B* and *C*, Figs. 26 and 28) and the portions which impart motion to the slides are alike in both cams. The racks with which the segments mesh extend beyond their respective slides and their projecting ends are threaded to receive nuts for adjusting the tools to their cuts. In addition to these adjusting nuts, stop screws are

Digitized by Google

provided at the rear as in Fig. 34, for insuring accuracy in forming operations.

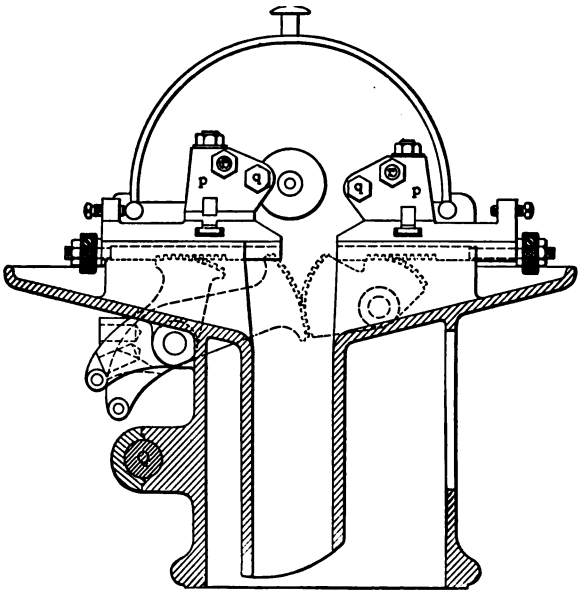

FIG. 34.—Cross section and cross-slide mechanism.

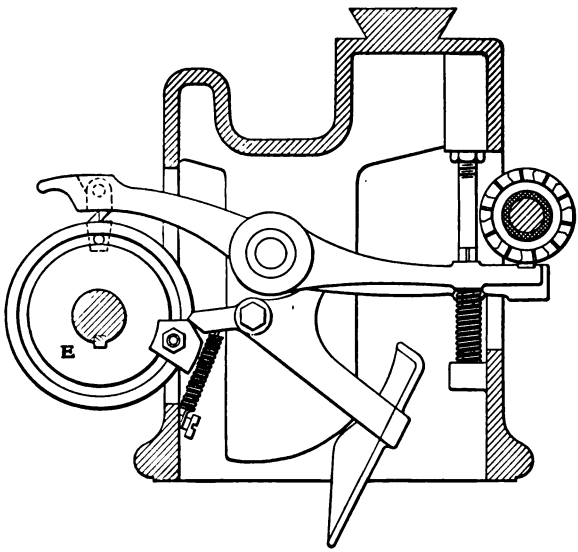

FIG. 35.—Operation of Deflector.

Circular tools are used on the cross slides and these are held in position on blocks *p p* by screws *q q* and clamped by screws *r r*, Fig. 34.

Digitized by Google

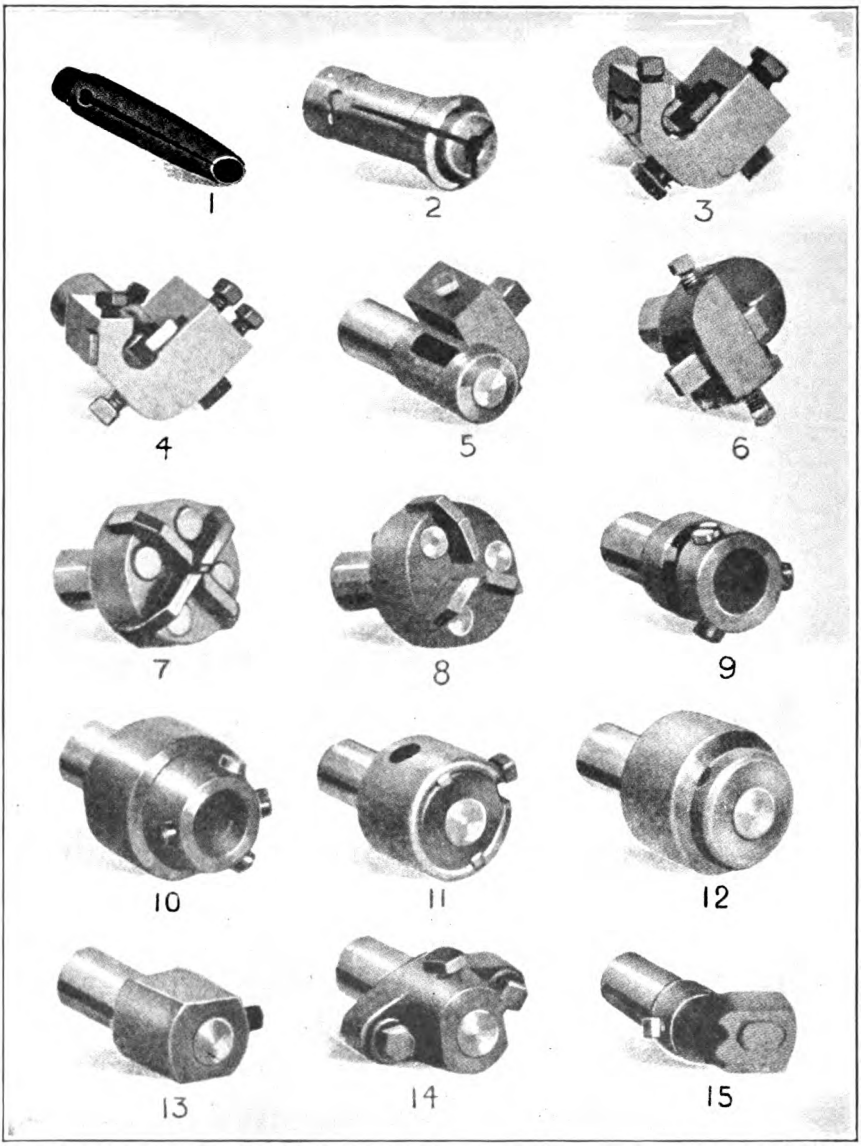

1. Feed Chuck.
2. Spring Collet.
3. Box Tool.
4. Box Tool with Center Drill.
5. Pointing Tool.
6. Centering and Facing Tool.
7. Adjustable Hollow Mill (Finishing).
8. Adjustable Hollow Mill (Roughing).
9. Die Holder.
10. Die Holder (Releasing).
11. Tap Holder.
12. Tap Holder (Releasing).
13. Drill Holder.
14. Floating Holder.
15. Back Rest for Turret.

FIG. 36.—Brown & Sharpe automatic screw machine tools.

Digitized by Google

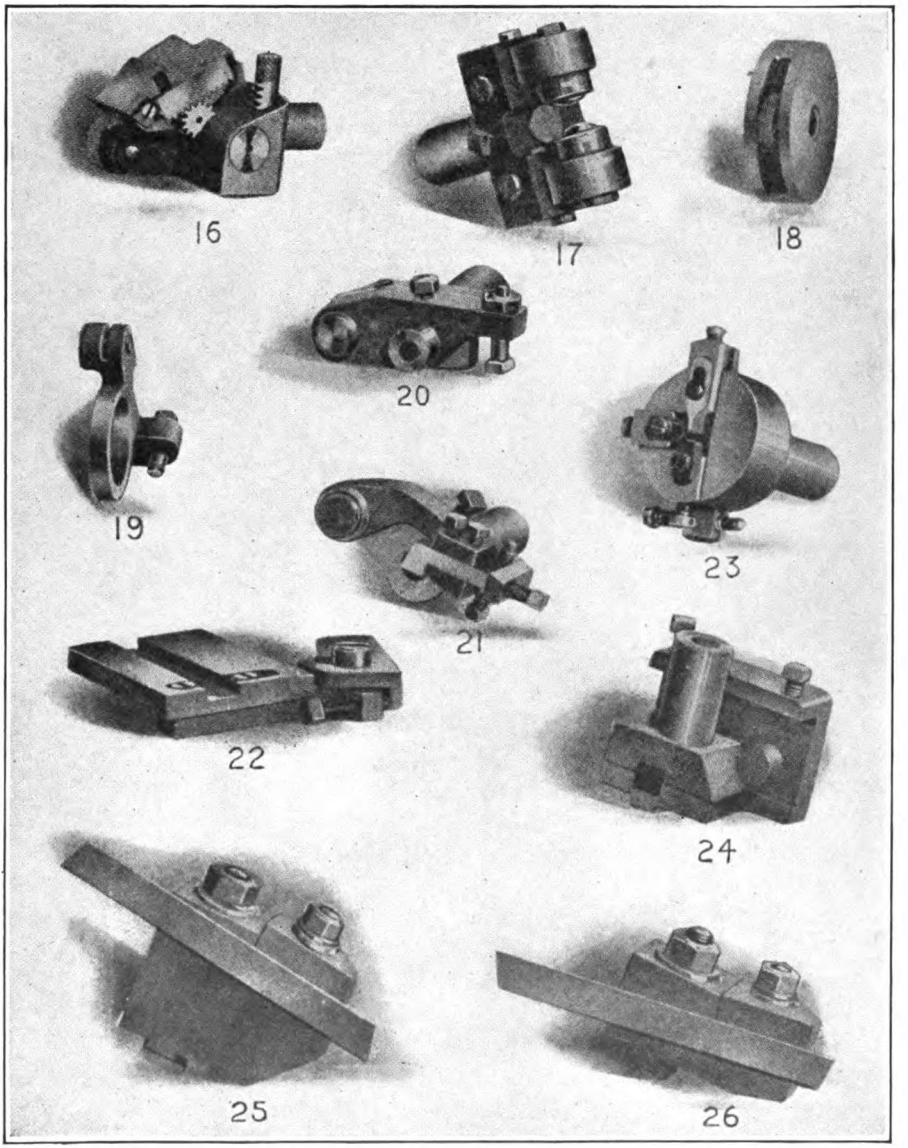

16. Angular Cutting-off Tool.
17. Nurl Holder for Turret.
18. Nurl Holder for Cross Slide.
19. Nurl Holder for Cross Slide.
20. Recessing Tool.
21. Swing Tool.
22. Adjustable Guide used with Tools 20, 21, 23.
23. Taper Turning Tool.
24. Tool Post for Square Tools.
25. Cutting-off Tool Post (High).
26. Cutting-off Tool Post (Low).

FIG. 37.—Brown & Sharpe automatic screw machine tools.

Digitized by Google

DEFLECTOR

In Fig. 35 is shown a deflector which is operated by an adjustable dog on carrier *E* and separates the work from the chips. The oil pump is driven by chains from the main pulley and is not stopped when the feed clutch is disconnected; thus an ample supply of lubricant on the work is insured at all times.

TOOLS AND ATTACHMENTS

Various tools used on this machine are illustrated in Figs. 36 and 37, the names being given at the bottom of the half-tones. The illustrations are, in most cases, self-explanatory. No. 22 in Fig. 37, it may be stated, is an adjustable guide applied to the cross slide and used for operating recessing tool 20, swing tool 21, and taper turner 23. The latter has two back rests and one cutting tool which are independently adjustable, and

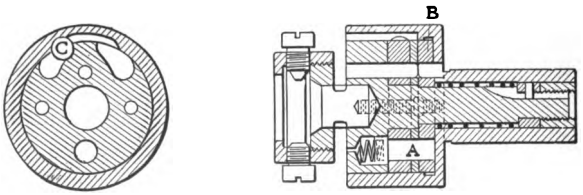

FIG. 38.—Releasing die holder.

the taper given the work is determined by the angle on the guide 22. When the proper taper is obtained, the tool and the back rests are withdrawn radially from the work, thus preventing tool marks on the finished piece.

The construction of the releasing die holder is shown in Fig. 38. *A* is the driving pin and, when it is pulled out of the plate *B*, the die holder releases and, when the spindle is reversed, the ball *C* drives the die off. One ball recess is for right-hand threads and the other for left-hand threads. With this die holder the turret slide can move back some distance after the holder is released and still, as soon as the spindle is reversed, the die will be backed off the thread.

No circular forming tools are included in the groups in Figs. 36 and 37, but in Fig. 39 two circular tools and their holders are plainly shown. This illustration also represents clearly the tap-and-die revolving attachment which rotates the tap or die in the same direction as the spindle, but at one-half the spindle speed. It is of service where the work requires no other slow movement except that for threading and enables the spindle to be run at its maximum speed for satisfactory production of

Digitized by Google

the work, while the tap or die is revolved at a suitable speed for threading.

Fig. 40 shows the screw-slotting attachment which takes the screws

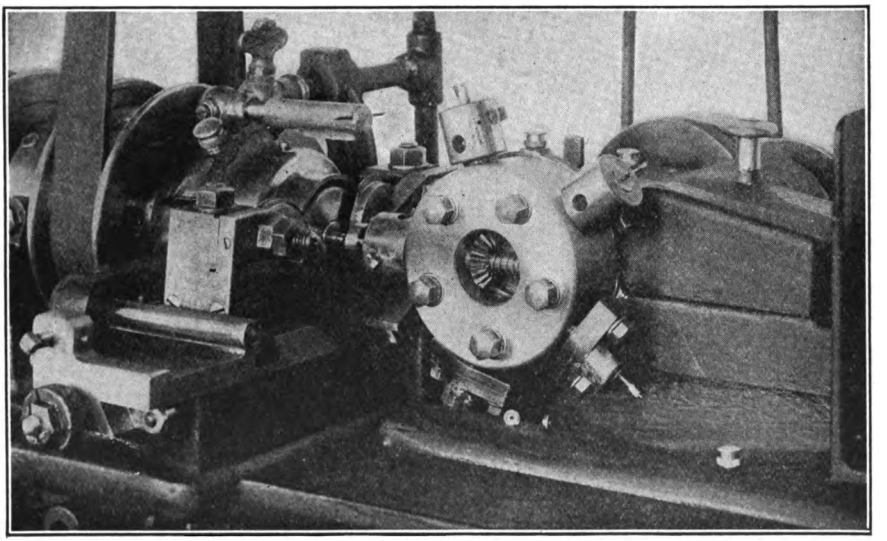

FIG. 39.—Tap and die revolving attachment.

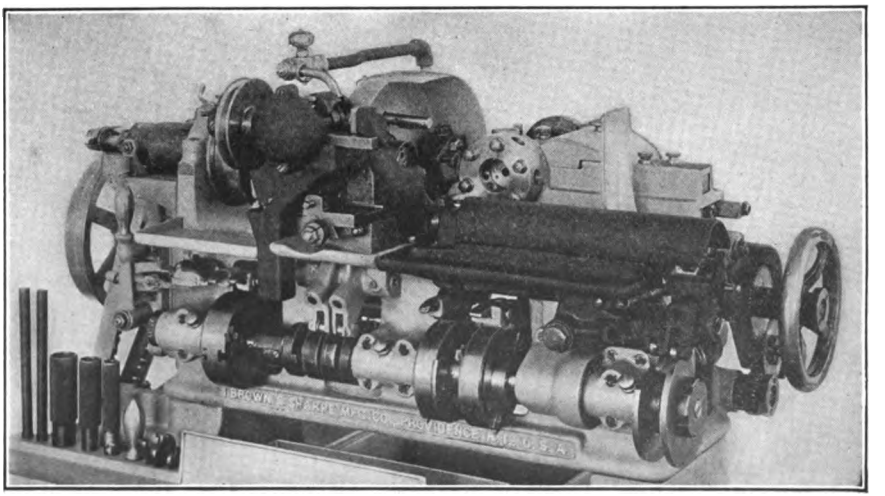

FIG. 40.—Screw-slotting attachment.

as they are left by the machine and slots them automatically. The saw is mounted on a slide and driven by a round belt from the countershaft. It can be adjusted for depth of cut by a screw at the back of the slide.

Digitized by Google

The screw to be slotted is held in a bushing carried in a floating holder mounted in a swinging arm which can be adjusted radially by a screw and nut on the rotating lever. The device is operated by cams that are

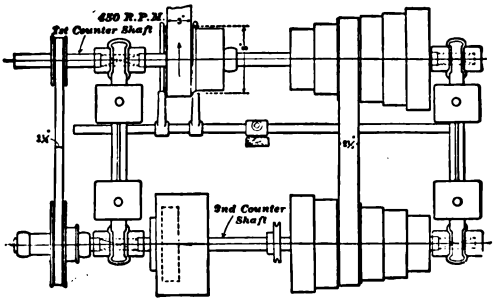

FIG. 41.—Plan of overhead works for Brown & Sharpe No. 00 automatic screw machine.

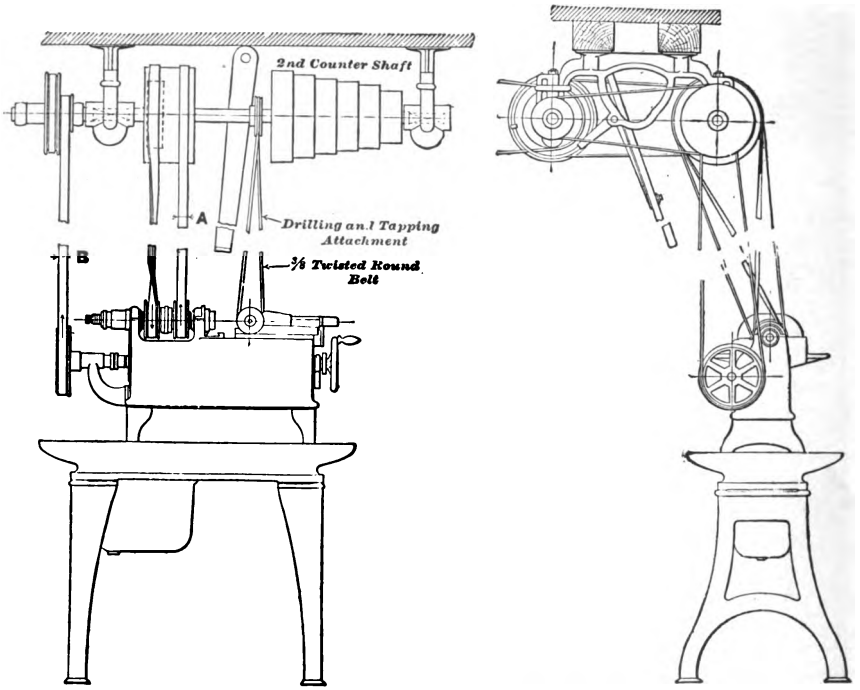

FIG. 42.—Front and end elevations of overhead works for Brown & Sharpe No. 00 automatic screw machine.

mounted as indicated on the front shaft of the machine. The forward and upward movements of the arm are positive and the return movements are controlled by springs.

Digitized by Google

Another attachment (not shown) is for running a drill at high speed where small holes are required in the work. This attachment is also driven by a round belt from the counter.

COUNTERSHAFT ARRANGEMENT

Figs. 41 and 42 show the overhead works for the No. 00 automatic. As will be observed, there are two countershafts; the first one having 8-inch fast-and-loose pulleys taking 3-inch belts. This shaft should run at about 450 turns per minute. The second countershaft is driven by a six-step cone pulley and has a drum 14¾ inches diameter, and two smaller pulleys 10¾ and 5½ inches diameter respectively for operating the spindle pulleys.

A double pulley running freely on the end of the shaft serves as an intermediate between the first counter and the feed-driving pulley on the machine. Thus a constant rate of speed is provided for the feed mechanism regardless of the spindle speed.

SIZES OF MACHINES

The chuck and turning capacity of the No. 00 machine, as already stated, is 5/16 by 1¼ inch, the minimum length that can be fed being 2 inches. The No. 0 machine receives stock up to ½ inch in the chuck, turns lengths up to 1¾ inches and has a maximum feeding movement of 3 inches. The No. 2 machine handles material up to ⅞-inch diameter, turns lengths up to 2½ inches and feeds any length up to 4 inches.

Digitized by Google

CHAPTER IV

LAYING OUT BROWN & SHARPE SCREW MACHINE CAMS

This chapter on camming, prepared by F. E. Anthony, of Providence, R. I., gives a practical idea of the method employed in laying out the cams for the Brown & Sharpe automatic screw machine. The example taken is a simple screw, but the laying out of the cams and the methods employed are practically the same for a more complicated piece, excepting that the lobes of the cams would necessarily have to be designed to suit the various operations on more complicated work.

ORDER OF OPERATIONS

Assuming that a screw as shown in Fig. 43 is to be made from common yellow brass and the requirements are such that it is necessary to take roughing and finishing cuts to produce the desired blank size before threading, the following order of operations would be selected: rough turn with hollow mill; index turret; finish turn with box tool; index turret; thread; cut-off screw; feed stock to stop; index turret.

The facing of the under side and the removing of the burr on the outer diameter of the head, as well as the indexing of the turret three times to bring the stop into position for feeding the stock for the next blank, are not considered in the above operations, as usually these operations can be performed during the time required for parting the screw from the bar.

The spindle speed, length of cuts, feed per revolution of spindle for the various cuts, the time consumed by the idle movements, such as feeding the stock, indexing the turret and reversing the spindle, also the clearance between the turret and cross-slide tools, are taken into consideration to determine the total number of revolutions of spindle required for completing the screw. The fastest spindle speed for the machine, which is 2400, can be used for brass.

DETERMINING THE NUMBER OF SPINDLE REVOLUTIONS

To determine the number of revolutions of the spindle required for the various cuts, divide the length of cut by the feed or advance of the tool per revolution of the spindle. Calculating on a feed of 0.012 inch

Digitized by Google

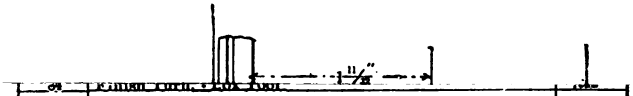

22	Index Turret.		
66	Thread. - Die Holder and Die.		
22	Clearance.		
	Form. - Front Slide = 44 Rev's.	Same Time	.0016"
96	Cut Off. - Back Slide and Index Turret.	3 Times	.0015"
22	Feed Stock to Stop.		
22	Index Turret.		
440	Total Revolutions.		

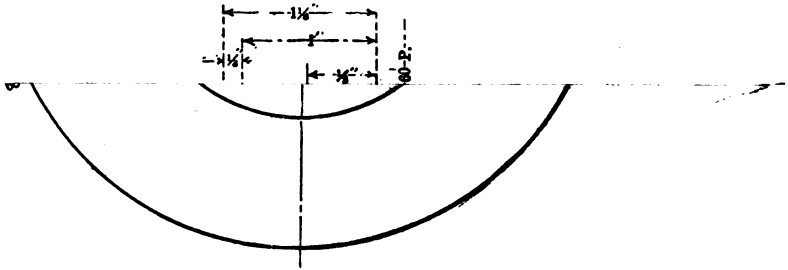

FIG. 43.—Cam layout (above ¾ size).

[To face page 156]

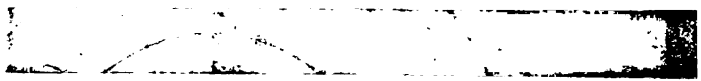

Digitized by Google

Digitized by Google

for roughing, which cut is 1 inch long, 83 revolutions and a fraction of a revolution will be required. As it is not practicable to consider fractions of revolutions, the roughing cut will be given 84 revolutions. After the roughing cut, the turret is indexed to bring the finishing tool into position. The mechanism that rotates the turret maintains a constant speed, and the indexing of the turret, to bring another tool to the cutting point, requires one-half second in all cases. With the spindle running 2400 revolutions per minute, each change consumes 20 revolutions. It is an advantage, however, to allow extra revolutions for the operation to facilitate adjusting the dogs that control the mechanism; allowing 22 revolutions for the change will give the desired result.

For the finishing cut, which is 1 inch long, and calculating a feed of 0.012 inch per revolution, 84 revolutions will have to be allowed as for roughing.

The pitch of the thread on the screw being 60 per inch, the number of revolutions required for running the die on the screw (which has a thread ½ inch long) will be one-half of 60, or 30, actual revolutions. To this amount should be added extra revolutions for clearance; allowing 33 revolutions for running the die on to the screw and the same number for backing the die off will give a total of 66 revolutions for threading.

SPINDLE REVOLUTIONS REQUIRED DURING CROSS-SLIDE MOVEMENTS

A certain amount of the cam circle must be allowed between the threading and cutting-off operations, so that the cross-slide tools will not begin to advance to the cutting point until the die holder has dropped back beyond the interfering point. The drop for each cross slide is 1 inch, giving a distance of 2 inches from edge to edge of the cross-slide tools, with the slides in the backward position.

The die-holder cap with adjusting screws requires approximately 1½ inches space to pass through; as there are 2 inches between the cross-slide tools, should these tools begin to advance to the cutting point as soon as the die reaches the end of the screw (when backed off), there would be a trifle more clearance than actually required.

Consulting the templet shown in Fig. 44, it will be noted that 5 hundredths of the cam circle are taken up in advancing the cross-slide from its backward position (which is determined by the low portion of the cam) to the point where the tool commences the cut. The revolutions of the spindle during this clearance can be determined after finding the total revolutions required for the different operations and idle movement. The cutting-off tool, as shown in Fig. 43, is arranged with a parting blade that has a 23-degree angle on the cutting edge; this is for the

Digitized by Google

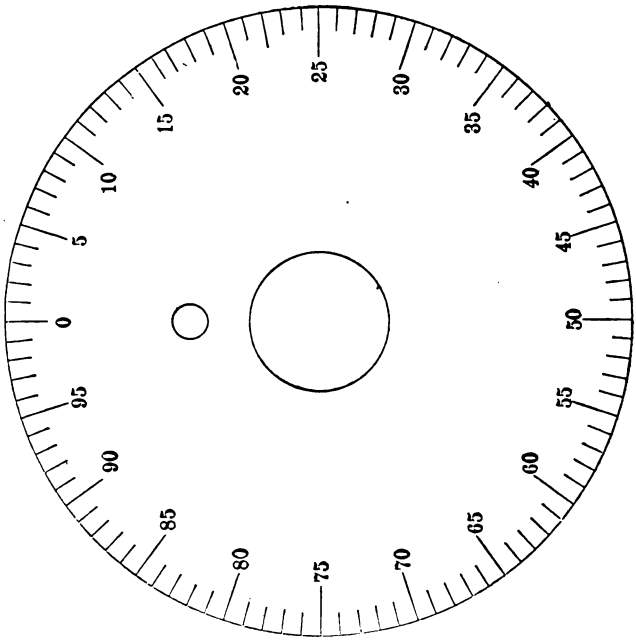

FIG. 45.—Graduated index for laying out No. 00 cams (about ¾ size).

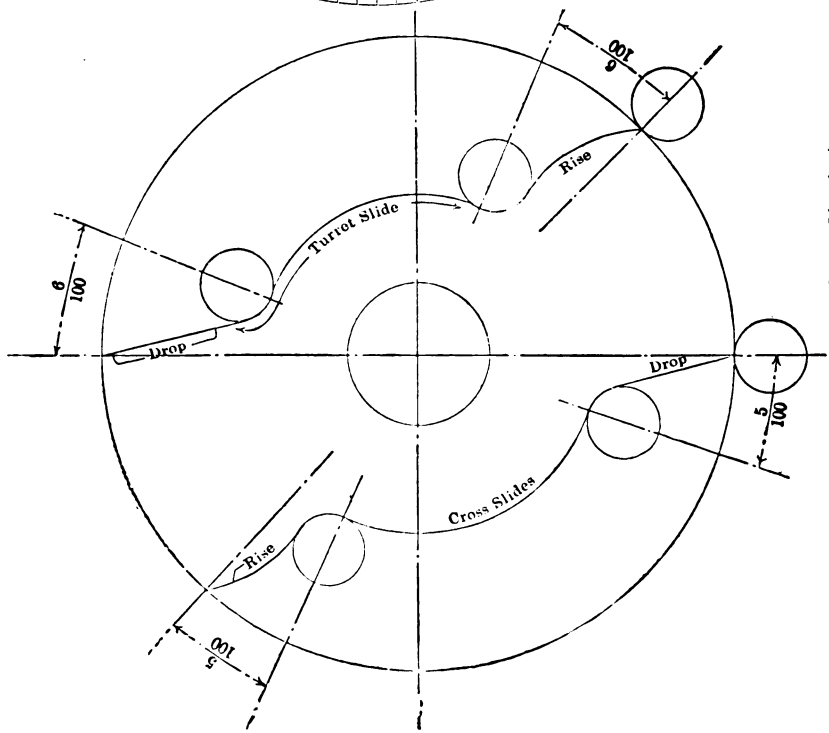

FIG. 44.—No. 00 cam templet (about ¾ size).

Digitized by Google

purpose of making the parting close to the head of the screw, to avoid leaving a large teat on the piece when dropped.

Using an angular blade, it is necessary to allow extra travel so that the low point of the angle can be carried a trifle by the center of the spindle to insure removing the teat on the bar, which is termed "by travel." Add to the radius (0.125 inch) of the bar used 0.019 inch, the amount of "by travel" required for the cutting-off tool plus 0.003 inch clearance to allow for variations in material, and we have a total of 0.147 inch travel for the cutting-off tool; considering a feed or advance of 0.0015 inch per revolution, approximately 97 revolutions will be required for cutting off.

The facing of the under side of the head (the tool for which travels from ¼ inch diameter of stock to ⅛ diameter of finished size) requires a travel of 0.067 inch, including clearance to allow for variation in material; this cut carried at a feed of 0.0016 inch will require approximately 42 revolutions. As this cut can begin at the same time as the cutting-off operation and will be completed by the time the screw is partially cut off, the revolutions required need not be considered when determining the total number.

INDEXING AND STOCK-FEEDING ALLOWANCE

As there are but four turret tools used in making the screw, it will be necessary to index the turret three times after the threatening operation to bring the stop into position for feeding the stock for the following screw. The 97 revolutions allowed for cutting off will give ample time for these changes.

An allowance of 22 revolutions must be added for feeding the stock to the stop after cutting off and indexing the turret, to bring the roughing tool into position for the following screw.

The following table shows the total number of revolutions required for actual operations:

	Revolutions
Roughing cut	84
Index cut	22
Finishing cut	84
Index cut	22
Threading	66
Clearance	..
Cutting off	97
(Index turret three times; face under side of head)	
Feed stock	22
Index turret	22
	419

Digitized by Google

As 5 hundredths of the cam circle must be allowed for clearance between the die holder and cross-slide tools, the above total of 419 revolutions represents 95 hundredths of the cam circle. Dividing 419 by 95, the quotient, 4.41 (the number of revolutions in 1 hundredth), multiplied by 100 gives a total of 441 revolutions of the spindle to complete the screw.

SELECTING CHANGE GEARS

With each machine a number of change gears are furnished to allow the cam-shaft speeds to be varied from 3 to 30 seconds per revolution. These gears allow variations of one second to be made. As the spindle makes 40 revolutions per second, selecting a train of gearing from the gear table (see Table 12) accompanying the machine, that will give a revolution of the cam shaft in 11 seconds, the spindle will make 440 revolutions to one of the cam shaft. It will, therefore, be necessary to take away a revolution from one of the operations, the total being 441. Allowing 96 revolutions for cutting off, instead of 97, as previously calculated upon, will not make any material difference to the feed for this cut.

DIVISION OF THE CAM CIRCLE

As it is not convenient to divide the cam blanks into various numbers of parts equal to the number of revolutions required for making different pieces, it is the general practice to divide the cam circle into 100 equal parts, as shown in Fig. 45. The number of hundredths for the lobes and spaces on the cams is obtained by dividing the number of revolutions for each operation by the total number, taking the nearest decimal with two places. For example: The number of revolutions for the roughing cut is 84; dividing 84 by 440, the result, 0.19, is the number of hundredths of the cam circle required for the first cut. Reducing the remainder of the operations in the same manner the cam circle is divided as follows:

	Revolutions	Hundredths
Rough turn	84	19
Index turret	22	5
Finish turn	84	19
Index turret	22	5
Thread	66	15
Clearance	22	5
Cut off	96	22
Feed stock to stop	22	5
Index turret	22	5
	440	100

Digitized by Google

THE TURRET AND CROSS-SLIDE CAMS

Commencing at the line opposite the ¼-inch hole in the cam blank, as shown in Fig. 43, the turret-slide cam is divided as follows:

0 to 19, lobe for roughing cut;
19 to 24, space for indexing turret;
24 to 43, lobe for finishing cut;
43 to 48, space for indexing turret;
48 to 63, lobe for threading;
63 to 90, reduced to diameter (2¼ inches) of cam carrier, allowing turret to dwell in rear position during the time taken up for clearance and the cutting-off and facing operation;
90 to 95, lobe for feeding stock;
95 to 0, space for indexing turret.

A clearance of 5 hundredths has been calculated on after threading to avoid interference of the cross-slide tools with the die holder, in which case the cross-slide cam for cutting off will commence at 68 and extend to 90. The parting of the piece from the bar will occur before the complete portion of the lobe has passed the roll on the cross-slide lever, due to the extra amount of throw on the cam necessary for removing the teat on the bar which has previously been termed "by travel," in which case the stop for feeding the stock can be in position as soon as the cutting-off tool commences to drop back after cutting off. The travel of the facing tool, which commences at ¼ diameter and is carried forward to ⅛ diameter, will be approximately 0.067 inch, including clearance; advancing the tool at 0.0016 inch per revolution, 42 revolutions will be required. To this number are added 2 revolutions for dwell of the tool at the finishing point, making a total of 44 revolutions, which takes up 10 hundredths of the cam circle. As 2 revolutions for dwell will require ½ hundredth, the throw of 0.067 inch will take 9½ hundredths of cam surface.

The facing operation commences at the same time as the cutting-off; consequently the spacing of the front-slide cam will be from 68 to 77½ for advance of tool, 77½ to 78 for dwell.

The height of the various cam lobes is determined by the lengths of the tools to be used. The face of the turret is approximately 1⅝ inches from the face of the chuck, with the turret-slide lever on a cam portion 4½ inches diameter.

Digitized by Google

THE LAYOUT

On the cam layout sheet, Fig. 43, three perpendicular, parallel lines, approximately 1 inch long, should be drawn, with a distance of 1⅝ inches between the first and second, and 1⅛ inches between the second and third lines. The first line represents the face of the chuck; the second, the face of the turret with the lever on a cam 4½ inches diam-

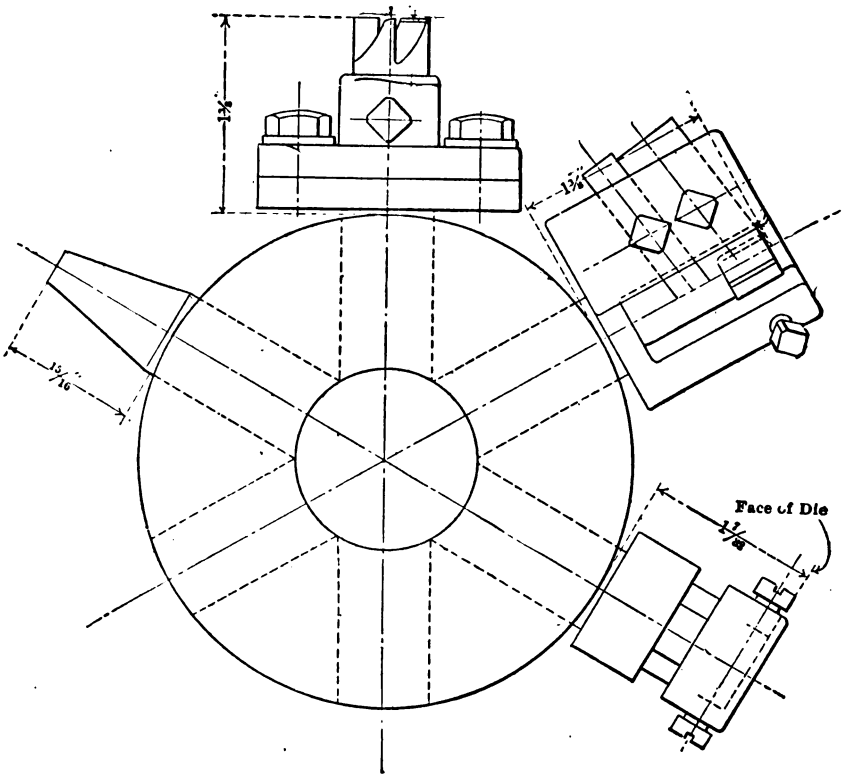

FIG. 46.—Diagram of turret and tools.

eter; and the third, the face of the turret with the slide in the rear position. A line drawn at right angles through the center of these lines represents the center of the spindle. The cross-slide tools and sample should be drawn to scale close to the chuck line. The line representing the center of the spindle is necessarily the center of the piece to be made. The roughing and finishing cuts are carried close to the under side of the head of the screw. The hollow mill and the head portion of its holder, which extends beyond the face of the turret, is 1⅜ inches long.

Digitized by Google

as shown in Fig. 46; as the under side of the head is approximately $1^{11}/_{32}$ inches from the line, representing the face of the turret in the forward position on a 4½-inch cam diameter, it will be necessary to arrange for the high point on the lobe to stop at least $^1/_{32}$ inch below the 4½-inch circle on the layout sheet, so that the cut will not be carried forward to such a point that the proper thickness of head cannot be obtained. An extra thirty-second of an inch should be allowed to facilitate adjusting the tool, in which case the high point of the roughing lobe should stop $^1/_{16}$ inch below the 4½-inch circle; as the rise on that lobe is 1 inch (the length of the cut), the low point will be $1^1/_{16}$ inches below the 4½-inch circle.

THE TURRET-SLIDE CAM LOBES

From the zero line to 19 hundredths of the cam circle, construct an increase curve, with a rise of 1 inch for the roughing cut. The method of laying out the increase curve, approximately, is shown in Fig. 43. With a templet as shown in Fig. 39 draw the line of drop, beginning at 19 hundredths, and draw an arc equal to the radius (¼ inch) of the turret-slide lever roll, tangent to the drop line, with the low point of the arc about $^1/_{16}$ inch below the starting point of the following lobe. The lobe for the finishing cut is a duplicate of the roughing.

In constructing the threading lobes, it is the usual practice to allow the die head, which is arranged to slide on the holder, to draw away from the turret to prevent crowding the die on to the work.

As 33 revolutions are allowed for running the die on to the screw, the advance of the die would be $^{33}/_{60}$ (0.537 inch). From this, deduct 0.060 inch to allow the die to draw away from the turret. The result, 0.467 inch, is the rise for the lobe, and the drop for backing the die off of the screw must necessarily be the same.

When determining the height of the lobe, the amount of "pull out" allowed for the die must be taken into consideration.

The length of the die-holder head, as shown in Fig. 46, is $1^7/_{32}$ inches plus 0.060 inch allowed for "pull out." The result, which is approximately $1^9/_{32}$ inches, is the total length of holder to be considered.

The threading begins at 48 hundredths and requires 15 hundredths of cam surface. The rise for following the die on the screw would be 0.467 inch (7½ hundredths). Locating the high point of the lobe at 55½ hundredths, the length of the holder plus $^1/_{32}$ inch for clearance makes it necessary to cut the high point $^{15}/_{32}$ inch below the 4½-inch circle.

Construct the increase curve for the drop and rise in the same manner as shown in Fig. 43 for the roughing cut.

Digitized by Google

The die will have backed off the screw at 63 hundredths and the portion of cam surface from this point to the starting point of the stop lobe should be cut down 1⅛ inches from the 4½-inch circle to allow the turret to remain in the rear position during the cutting off and facing operations. Allowance should be made for the drop from the point on the threading lobe and the rise for the stop lobe, using the templet, Fig. 44, for constructing the lines.

THE CROSS-SLIDE CAM LOBES

The cross-slide cam blanks are 4½ inches diameter. It is not necessary to cut the high point of the lobes on the cams below this diameter when using forming and cutting-off tools, as the slides are arranged with suitable adjustment for producing any diameter within the capacity of the machine.

The rise and drop on the cross-slide cams are constructed from the templet, Fig. 44, and should be spaced in the same manner as the turret-slide cam, using the locating-pin hole for the zero line, in order to time the cams properly when placed in the machine.

The cutting off commences at 68 and is completed at 90 hundredths; the facing is from 68 to 78 hundredths.

STOCK STOP, SPINDLE REVERSE, ETC.

The stop lobe from 90 to 95 hundredths is without advance to produce a dwell of turret slide while feeding the stock. From 95 hundredths to zero, a drop necessary to bring the turret slide lever roll $^{1}/_{16}$ inch below the starting point for the roughing cut is constructed.

The reversing of the spindle does not consume time enough to make it necessary to allow on the threading lobe for this change. The reversing of the spindle from backward to forward after cutting off can be carried on during the operation of feeding the stock or revolving the turret.

Digitized by Google

No. 00 AUTOMATIC SCREW MACHINE.

Table for Laying Out Cams.

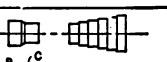

TIME IN SECONDS TO MAKE ONE PIECE.	GROSS PRODUCT IN 10 HOURS.	NET PRODUCT IN 10 HOURS GROSS MINUS 10%	GEAR ON DRIVING SHAFT.	GEAR ON WORM SHAFT.	HUNDREDTHS OF CAM SURFACE TO FEED STOCK.		SPINDLE SPEEDS. MIN. SEC. ½ SEC	* ONE WAY ONLY								SPINDLE SPEEDS BELT ON							
								3.5	4.1	4.8	5.6	6.6	7.7	9.1	10.6	*A	*B	C					
								7	8.2	9.6	11.2	13.2	15.4	18.1	21.2	24.8	29.1	34.1					
								420	492	576	675	792	927	1087	1273	1492	1748	2048					
																420	492	576	675	792	927	1087	1273
																792	927	1087	1273	1492	1748	2048	2400
																1273	1492	1748	2048	2400			
																2048	2400						
3	12000	10800	70	21	17			21	25	29	34	40	46	54	64	75	87	102	120				
4	9000	8100	50	20	13			28	33	38	45	53	62	72	85	99	117	137	160				
5	7200	6400	60	30	10			35	41	48	56	66	77	91	106	124	146	171	200				
6	6000	5400	50	30	9			42	49	58	67	79	93	109	127	149	175	205	240				
7	5142	4600	60	42	8			49	57	67	79	92	108	127	149	174	204	239	280				
8	4500	4000	60	48	7			56	66	77	90	106	124	145	170	198	233	273	320				
9	4000	3600	60	54	6			63	74	86	101	119	139	163	191	224	262	307	360				
10	3600	3200	40	40	5		NUMBER OF REVOLUTIONS TO MAKE ONE PIECE.	70	82	96	112	132	154	181	212	249	291	341	400				
11	3272	2900	40	44	5			77	90	106	124	145	169	199	233	274	320	375	440				
12	3000	2700	40	48	5			84	98	115	135	158	185	217	255	298	350	410	480				
13	2769	2400	40	52	4			91	107	125	146	172	201	236	276	323	379	440	520				
14	2571	2300	30	42	4			98	115	134	157	185	216	254	297	348	408	478	560				
15	2400	2100	40	60	4			105	123	144	169	198	232	272	318	373	437	512	600				
16	2250	2000	30	48	4			112	131	154	180	211	247	290	339	398	466	546	640				
17	2117	1900	20	34	3			119	139	163	191	224	263	308	361	423	495	580	680				
18	2000	1800	30	54	3			126	148	173	202	238	278	326	382	448	524	614	720				
19	1894	1700	20	38	3			133	156	182	214	251	294	344	403	472	554	649	760				
20	1800	1600	20	40	3			140	164	192	225	264	309	362	424	497	583	683	800				
21	1714	1500	20	42	3			147	172	202	236	277	324	380	446	522	612	717	840				
22	1636	1450	20	44	3			154	180	211	247	290	340	399	467	547	641	751	880				
23	1565	1400	20	46	3			161	189	221	259	304	355	417	488	572	670	785	920				
24	1500	1350	20	48	3			168	197	230	270	317	371	435	509	597	699	819	960				
25	1440	1300	20	50	3			175	205	240	281	330	386	453	530	622	728	853	1000				
26	1384	1250	20	52	3			182	213	250	292	343	402	471	552	647	757	887	1040				
27	1333	1200	20	54	3			189	221	259	304	356	417	489	573	671	787	922	1080				
28	1285	1150	20	56	3			196	230	269	315	370	433	507	594	696	816	956	1120				
29	1241	1100	20	58	3			203	238	278	326	383	448	525	615	721	845	990	1160				
30	1200	1050	20	60	3			210	246	288	337	396	463	543	636	746	874	1024	1200				

The number of hundredths given is always sufficient for feeding stock, but it is usually best to add 1-100 for revolving the Turret.

TABLE 12.—FOR LAYING OUT CAMS FOR BROWN & SHARPE NO. 00 AUTOMATIC SCREW MACHINE.

Digitized by Google

No. 0 AUTOMATIC SCREW MACHINE

Table for Laying Out Cams.

SPINDLE SPEEDS — BELT TO MACHINE ON PULLEY (A, B)								
FAST	445	543	663	810	988	1207	1474	1800
SLOW	200	244	298	364	445	543	663	810

TIME IN SECONDS TO MAKE ONE PIECE	GROSS PRODUCT IN 10 HOURS	NET PRODUCT IN 10 HOURS GROSS MINUS 10%	GEAR ON DRIVING SHAFT	GEAR ON WORM SHAFT	HUNDREDTHS OF CAM SURFACE TO FEED STOCK	SPINDLE SPEEDS											
						MIN.	200	244	298	364	445	543	663	810	988	1207	1474	1800
						SEC.	3.3	4.1	4.9	6.1	7.4	9.1	11.1	13.5	16.4	20.1	24.5	13.
						⅔ SEC	2.2	2.7	3.3	4.	4.9	6.	7.3	9.	10.9	13.4	16.3	20.
5	7200	6400	120	20	14	NUMBER OF REVOLUTIONS TO MAKE ONE PIECE	17	20	25	30	37	45	55	67	82	101	123	150
6	6000	5400	120	24	12		20	24	30	36	44	54	66	81	99	121	147	180
7	5142	4600	120	28	10		23	28	35	42	52	63	77	94	115	141	172	210
8	4500	4000	120	32	9		27	33	40	49	59	72	88	108	132	161	197	240
9	4000	3600	120	36	8		30	37	45	55	67	81	99	121	148	181	221	270
10	3600	3200	120	40	7		33	41	50	61	74	90	110	135	165	201	246	300
11	3272	2900	120	44	7		37	45	55	67	82	100	122	148	181	221	270	330
12	3000	2700	60	24	6		40	49	60	73	89	109	133	162	198	241	295	360
13	2769	2400	120	52	6		43	53	65	79	96	118	144	175	214	262	319	390
14	2571	2300	60	28	5		47	57	70	85	104	127	155	189	231	282	344	420
15	2400	2100	60	30	5		50	61	74	91	111	136	166	202	247	302	368	450
16	2250	2000	60	32	5		53	65	79	97	119	145	177	216	263	322	393	480
17	2117	1900	60	34	4		57	69	84	103	126	154	188	229	280	342	418	510
18	2000	1800	60	36	4		60	73	89	109	133	163	199	243	296	362	442	540
19	1894	1700	60	38	4		63	77	94	115	141	172	210	256	313	382	467	570
20	1800	1600	60	40	4		67	81	99	121	148	181	221	270	329	402	491	600
22	1636	1450	60	44	4		73	89	109	133	163	199	243	297	362	443	540	660
24	1500	1350	40	32	3		80	98	119	146	178	217	265	324	395	483	590	720
26	1384	1250	60	52	3		87	106	129	158	193	235	287	351	428	523	639	780
28	1285	1150	60	56	3		93	114	139	170	208	253	309	378	461	563	688	840
30	1200	1050	60	60	3		100	122	149	182	222	271	331	405	494	603	737	900
32	1125	1000	30	32	3		107	130	159	194	237	290	354	432	527	644	786	960
34	1059	950	30	34	3		113	138	169	206	252	308	376	459	560	684	835	1020
36	1000	900	30	36	3		120	146	179	218	267	326	398	486	593	724	884	1080
38	947	850	30	38	3		127	155	189	231	282	344	420	513	626	764	934	1140
40	900	800	30	40	3		133	163	199	243	297	362	442	540	659	805	983	1200
44	818	725	30	44	3		147	179	218	267	326	398	486	594	725	885	1081	1320
48	750	675	20	32	3		160	195	238	291	356	434	530	648	790	966	1179	1440
52	692	620	30	52	3		173	211	258	315	385	471	575	702	856	1046	1277	1560
56	642	575	30	56	3		187	228	278	340	415	507	619	756	922	1127	1376	1680
60	600	525	30	60	3		200	244	298	364	445	543	663	810	988	1207	1474	1800
65	553	490	30	65	3		217	264	323	394	482	588	718	877	1070	1308	1597	1950
70	514	450	24	56	3		233	285	348	424	519	633	773	945	1153	1408	1720	2100
75	480	430	24	60	3		250	305	372	455	556	679	829	1012	1235	1509	1842	2250
80	450	400	30	80	3		267	325	397	485	593	724	884	1080	1317	1609	1965	2400
90	400	350	20	60	3		300	366	447	546	667	814	994	1215	1482	1810	2211	2700
100	360	300	24	80	3		333	407	497	607	742	905	1105	1350	1647	2012	2457	3000
110	327	290	30	110	3		367	447	546	667	816	995	1215	1485	1811	2213	2702	3300
120	300	270	20	80	3		400	488	596	728	890	1086	1326	1620	1976	2414	2948	3600

TABLE 13.—FOR LAYING OUT CAMS FOR BROWN & SHARPE NO. 0 AUTOMATIC SCREW MACHINE.

Digitized by Google

No. 2 AUTOMATIC SCREW MACHINE.

Table for Laying Out Cams.

TIME IN SECONDS TO MAKE ONE PIECE.	GROSS PRODUCTION IN 10 HOURS.	NET PRODUCTION IN 10 HOURS GROSS MINUS 10%	GEAR ON DRIVING SHAFT.	1st GEAR ON STUD.	2nd GEAR ON STUD.	GEAR ON WORM.	HUNDREDTHS OF CAM SURFACE TO FEED STOCK.	SPINDLE SPEEDS. PULLEYS.	343 R.P.M. 149 R.P.M. 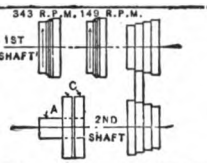	SPINDLE SPEEDS BELT TO MACHINE ON PULLEY A C FAST 277 342 421 519 640 789 973 1200 SLOW 120 148 182 225 277 342 421 519								
								SEC.	2	2.47	3.033	3.75	4.6167	5.7	7.0167	8.65	10.67	13.15	16.2167	20
								MIN.	120	148	182	225	277	342	421	519	640	789	973	1200
6	6000	5400	80	32	80	40	17	NUMBER OF REVOLUTIONS TO MAKE ONE PIECE.	12	15	18	22	28	34	42	52	64	79	97	120
7	5142	4600	80	32	72	42	15		14	17	21	26	32	40	49	61	75	92	114	140
8	4500	4000	80	32	72	48	13		16	20	24	30	37	46	56	69	85	105	130	160
9	4000	3600	80	32	72	54	12		18	22	27	34	42	51	63	78	96	118	146	180
10	3600	3200	80	32	72	60	10		20	25	30	37	46	57	70	86	107	131	162	200
11	3272	2900	80	32	84	77	10		22	27	33	41	51	63	77	95	117	145	178	220
12	3000	2700	80	32	60	60	9		24	30	36	45	55	68	84	104	128	158	195	240
13	2769	2400	80	32	72	78	9		26	32	39	49	60	74	91	112	139	171	211	260
14	2571	2300	80	32	60	70	8		28	35	42	52	65	80	98	121	149	184	227	280
16	2250	2000	80	32	60	80	7		32	39	49	60	74	91	112	138	171	210	259	320
18	2000	1800	80	32	48	72	6		36	44	55	67	84	103	126	156	192	237	292	360
20	1800	1600	80	32	48	80	5		40	49	61	75	92	114	140	173	213	263	324	400
22	1636	1450	80	32	42	77	5		44	54	67	82	102	125	154	190	235	289	357	440
24	1500	1350	80	32	40	80	5		48	59	73	90	111	137	168	208	256	316	389	480
26	1384	1250	80	32	36	78	4		52	64	79	97	120	148	182	225	277	342	422	520
28	1285	1150	80	32	36	84	4		56	69	85	105	129	160	196	242	299	368	454	560
30	1200	1050	60	60	80	80	4		60	74	91	112	138	171	210	259	320	394	486	600
35	1028	925	60	60	72	84	3		70	87	106	131	162	199	246	303	373	460	568	700
40	900	800	60	60	54	72	3		80	99	121	150	185	228	281	346	427	526	649	800
45	800	700	60	60	48	72	3		90	111	136	169	208	256	316	389	480	592	730	900
50	720	625	60	60	48	80	3		100	124	152	187	231	285	351	432	533	657	811	1000
55	654	575	60	60	42	77	3		110	136	167	206	254	313	386	476	587	723	892	1100
60	600	525	40	80	60	60	3		120	148	182	225	277	342	421	519	640	789	973	1200
70	514	450	40	80	60	70	3		140	173	212	262	323	399	491	605	747	920	1135	1400
80	450	400	40	80	54	72	3		160	198	243	300	369	456	561	692	853	1052	1297	1600
90	400	350	40	80	48	72	3		180	222	273	337	415	513	631	778	960	1183	1459	1800
100	360	300	40	80	48	80	3		200	247	303	375	462	570	702	861	1067	1315	1622	2000
110	327	290	40	80	42	77	3		220	272	334	412	508	627	772	951	1173	1446	1784	2200
120	300	270	40	80	40	80	3		240	296	364	450	554	684	842	1038	1280	1578	1946	2400
135	266	240	36	72	40	90	3		270	333	409	506	623	769	947	1168	1440	1775	2189	2700
150	240	210	36	80	40	90	3		300	370	455	562	692	855	1052	1297	1600	1972	2432	3000
165	218	190	36	77	35	90	3		330	407	500	619	752	940	1158	1427	1760	2170	2675	3300
180	200	180	36	84	35	90	3		360	444	546	675	831	1026	1263	1557	1920	2367	2919	3600

TABLE 14.—FOR LAYING OUT CAMS FOR BROWN & SHARPE NO. 2 AUTOMATIC SCREW MACHINE.

Digitized by Google

CHAPTER V

THE CLEVELAND AUTOMATIC TURRET MACHINE AND ITS CAM ADJUSTMENTS

One of the types of turret machines made by the Cleveland Automatic Machine Company, Cleveland, Ohio, is illustrated in Figs. 47, 48,

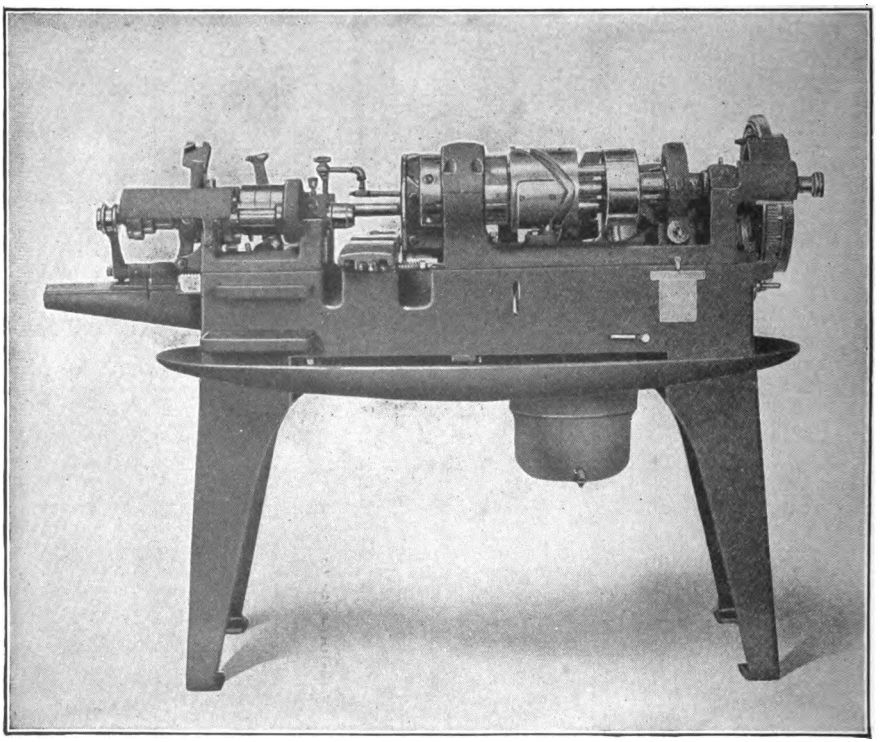

FIG. 47.—Cleveland automatic turret machine.

and 49. The latter is in reality a plan view of a different size of machine than that shown in Figs. 47 and 48, but the construction is essentially the same.

Digitized by Google

SPINDLE DRIVE

On the Cleveland machines, except in the cases of those built for light forming and brass work, which are direct driven, the spindle is driven by gears arranged on the shaft parallel to and behind it, so that a single belt running continuously in one direction will, when shifted from one pulley to another, drive the spindle alternately in opposite directions,

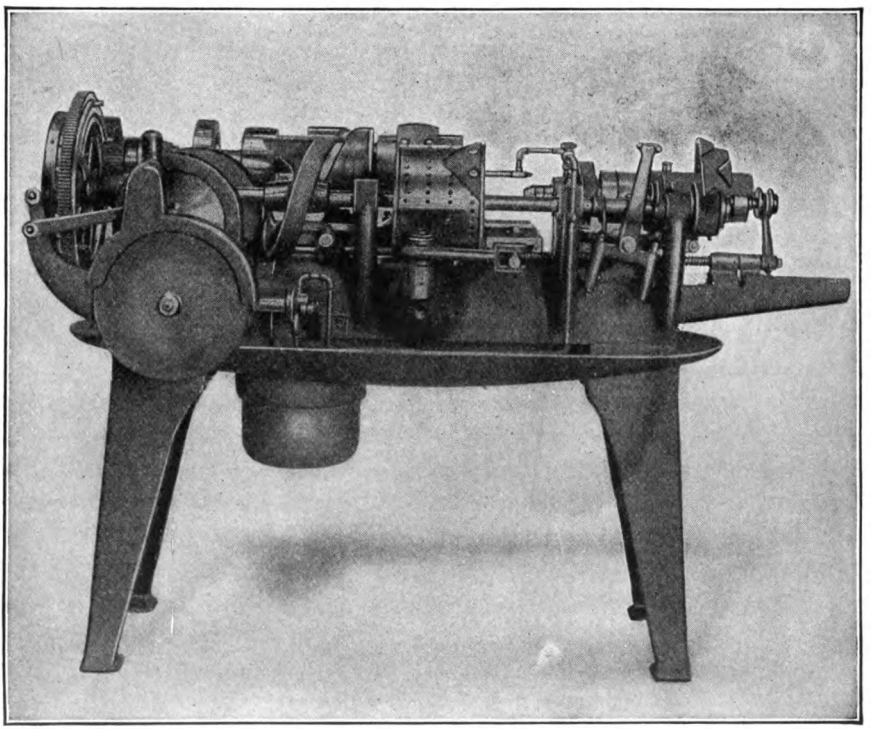

FIG. 18.—Cleveland automatic turret machine (rear view).

as is required in threading a screw and backing off the die. These gears are usually so proportioned that the speed of the spindle is greater when running in one direction than the other, so that in threading the die may be run off the screw at a much higher speed than is used in cutting the thread. Other operations, including cutting off, may also be run at the higher rate of speed. The movement for reversing the spindle when threading is practically an instantaneous one and the full width of the belt is used until the operation of threading is completed. The spindle carries the usual type of spring chuck and feed tube for the bar stock.

Digitized by Google

TURRET AND CROSS SLIDE

The turret for carrying the tools is mounted on a horizontal shaft located parallel to the spindle. The tools are held in a concentric position in the front end of the turret and the latter is indexed and locked at its periphery on a radius larger than that of the circle in which the tools are disposed, thus serving to maintain proper alignment of the tools with the work spindle. The means of supporting the turret during its forward and backward movements in the head, and the location of the longitudinal indexing notches in its periphery, are shown clearly, as is also the arrangement of the cross slide, which ordinarily carries two tool posts, one or both of which may be used as operations require.

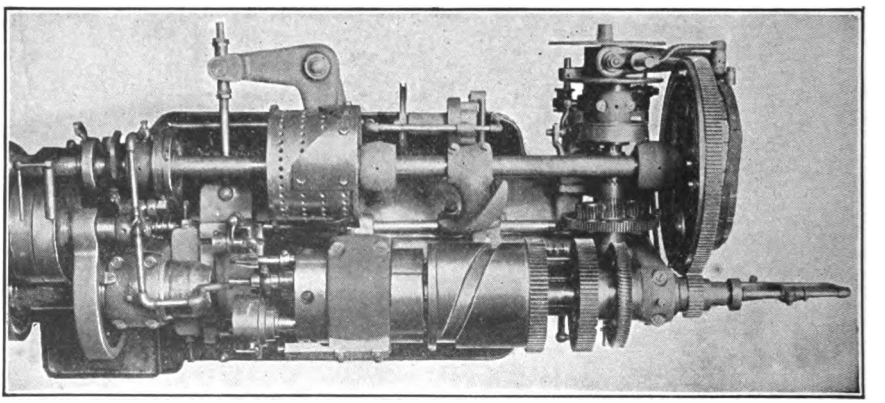

FIG. 49.—Cleveland automatic turret machine (plan view).

GENERAL SYSTEM OF OPERATION

The mechanism for operating the turret and the cross slide, as well as the stock feed and chuck, is driven through speed-changing friction disks, by a quarter-turn belt from the countershaft which drives the work spindle. This feed-driving mechanism, by means of planetary gears and suitable clutch connections, provides an automatically controlled rapid traverse for the turret and cross slide during the non-cutting movements and a slow, readily regulated rate of travel during the actual cutting operations. The method of controlling this feed drive will be referred to later. It will be understood, of course, that turret and cross slide, feed mechanism, etc., may be conveniently operated by hand by means of crank handle and lever, when setting up for a given piece of work.

Digitized by Google

An inspection of the half-tone engravings and the line drawing, Fig. 50, will reveal the location and character of the various cams, the means of controlling the spindle-driving belts, and other features of importance.

ARRANGEMENT OF CAMS

The cams may be classed under the following names: Turret cams, feed-regulating cams, cross-slide cams, chuck opening and closing cams, stock-feed cams. These cams are all clearly shown in position, in the half-tone engravings, and are represented also in the drawing, Fig. 50, which is a plan view of the operating mechanism.

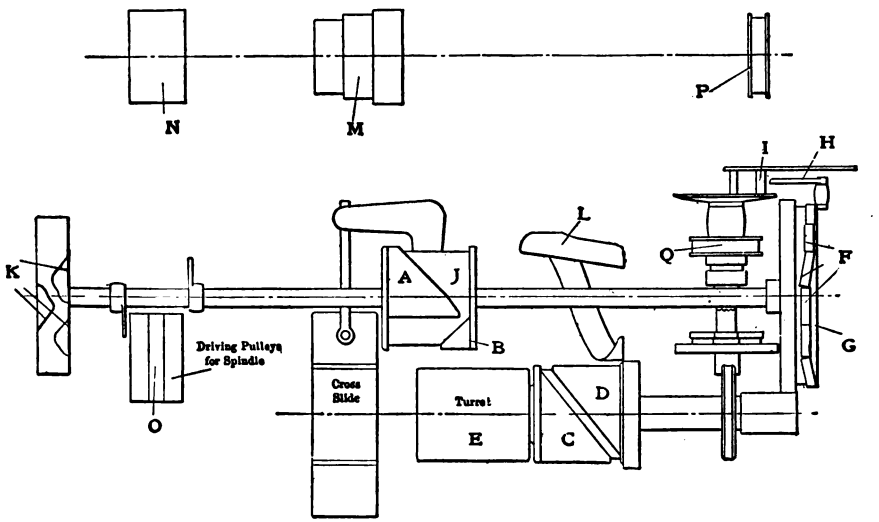

FIG. 50.—Camming diagram, Cleveland automatic turret machine.

The turret cams located just to the rear of the turret, as seen in Figs. 47 and 49, are shown at *C* and *D* in the diagram, Fig. 50. These cams are fixed and are never changed. The forward and back movements of the turret *E*, controlled by these cams, are constant for all kinds of work; the idle travel of the turret, before the tools reach the work, is made at high speed, the cutting feed being tripped in just as the tool reaches the point at which it is to start cutting. The feed of the turret to every revolution of the spindle is variable to suit the conditions of each individual tool held in the turret. That is, if there are five cutting tools in the turret and each tool requires a different feed from any of the others, each individual rate of feed is obtainable by means of the adjustable feed-regulating cams.

Digitized by Google

FEED-REGULATING CAMS

These cams, as seen in the general views, and at *F*, Fig. 50, are strips of flat steel ¼ x 1 inch, and each cam is held in place by two screws. The cams may be moved across the face of the drum *G*, this movement being provided for by slots milled in the drum, where the screws clamp the cams; also, they may be set at slight angles, taking peculiar staggered positions, as may be seen in the drawing. There are two of the cams for each hole in the turret, and the amount of feed per revolution of spindle is controlled by these cams to suit the individual requirements of each tool.

In setting these cams the operator watches the cutting tools and adjusts the cams until the tools are removing the desired amount of stock per revolution of spindle. A slight change of angle on any of the cams produces a noticeable difference in the turret feed. The cams act through the medium of the levers *H*, which raise and lower the friction roll *I* between the friction disks and so give the variable feed. The disks are clearly shown in Figs. 48 and 49, as well as in the drawing just referred to. The cams *F* that are set at an angle, or staggering, as they appear in the drawing, are in most cases intended for carrying the roll from one cam to another; that is, from the cam set back to the one forward, or vice versa. There are, however, occasional cases when a cam may be used at an angle, say in drilling certain holes. Thus the drill can start in with the feed decreasing, or increasing, as it advances. When using a drill that is not an oil feed, the lubricant does not reach the cutting edge as the drill advances; for this reason it may be desirable not to feed the drill so rapidly, and in such instances it is advisable to use the feed-regulating cam set at an angle.

CROSS-SLIDE CAMS

The drum *J*, carrying the cross-slide cams, has (as will be noticed in Figs. 48 and 49) a number of rows of tapped holes around the periphery. The cams *A* and *B* are standard for all work and are adjustable around the drum. The rate of feed of the cross slide is variable, this also being controlled through the regulation of the cam-shaft speed by the feed-regulating cams *F*, in combination with the turret feed. If a forming tool is working in conjunction with a drill, the feed is set for the heaviest cut each tool will stand. If a cut-off tool is working either in conjunction with another tool or individually, the cams that take care of this tool are adjusted without interfering with other tools in the different operations.

Digitized by Google

CHUCK OPENING AND CLOSING CAMS

These cams are shown at *K*, and are also visible in the half-tone illustrations. As there shown they are cast solid on the face of a seg-

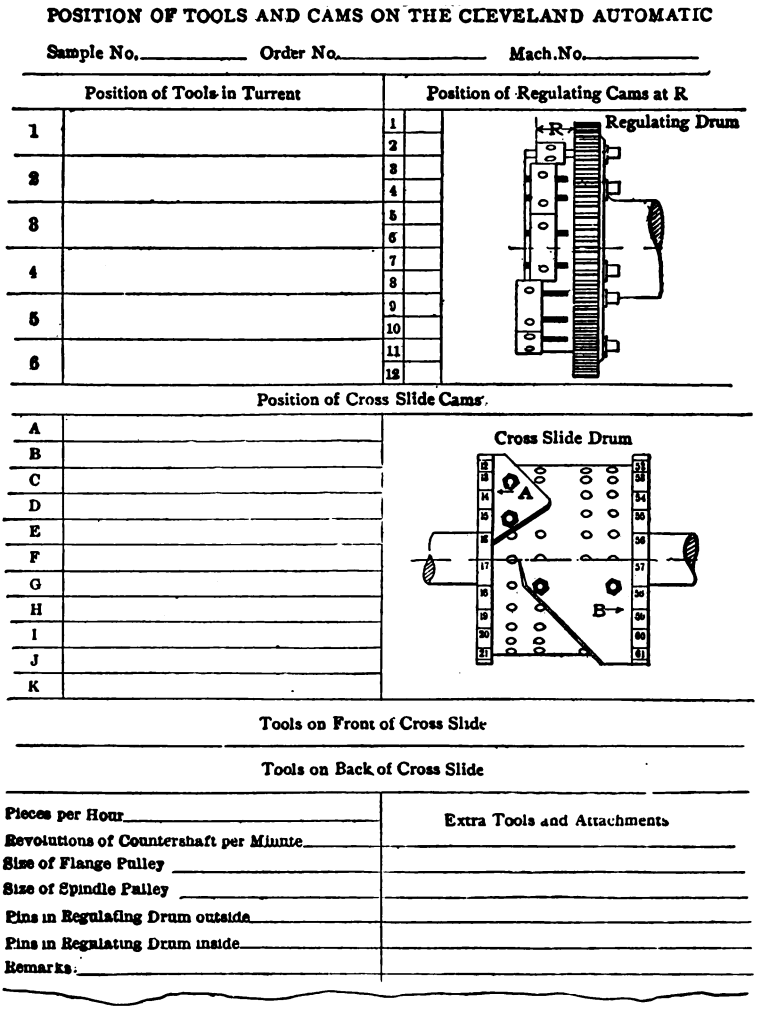

FIG. 51.—Setting-up chart for Cleveland automatic (actual size 6 × 12 inches).

ment for bar work, while for magazine and double-camming work a drum is used. For bar work adjustment is unnecessary, as the cams are cast in the correct position to allow ample time for chucking the longest piece within the capacity of the machine.

Digitized by Google

STOCK-FEED CAM

The stock-feed cam *L*, which answers for all work except where double feed is required, is cast to the required shape and clamped to the cam shaft. The general form is well illustrated in the rear view, Fig. 48, where the cam is shown just to the left of the cross-slide drum. Its adjustments are either around the cam shaft or lengthwise upon it.

In case double feed is desired, that is, if it is required to feed the stock twice to one revolution of the cam shaft, a drum is put on the shaft in place of this segment, and two cams, which are cast in the same outline as the segment, are fastened to the drum.

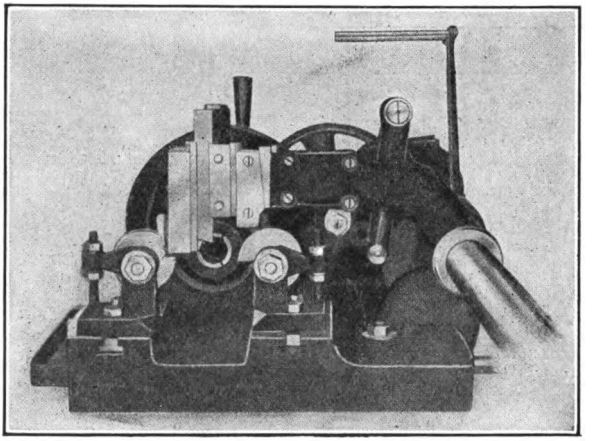

FIG. 52.—Independent cut-off attachment.

THE SETTING-UP FORM

Fig. 51 illustrates a printed form that accompanies machines that are tooled and covers all adjustment necessary in doing any class of work. The feed-regulating drum, shown at *G*, Fig. 50, and the cross-slide drum *J* are both represented on this sheet, which is designed to simplify the setting up of the machine when changing from one job to another.

SPEEDS, FEEDS, ETC.

The countershaft diagram is included in the drawing, Fig. 50, *M* being a three-step cone belted from the main line; *N* the drum from which the spindle-operating pulleys *O* are driven; *P* a pulley for driving the feed mechanism through the medium of a quarter-turn belt passing over pulley *Q*.

In setting up a job on the machine, the speed at which the spindle

Digitized by Google

must revolve in order to get the peripheral speed of work best adapted to the tools is the first consideration and is obtained by placing the belt from the line shaft on the most suitable of the three steps of countershaft pulley *M*, giving a fast, medium, or slow countershaft speed. As the tool feed is variable between widely separated extremes of feed, the changing of the speed of the countershaft does not affect the feed of the tools, as the feed-regulating cams *F* are adjusted to accommodate the faster or slower speeds of the countershaft and produce the desired rate of feed of the cutting tools per revolution of work.

ATTACHMENTS AND TOOLS

A number of useful attachments are made for this machine and two of these are shown in Figs. 52 and 53. The independent cut-off attach-

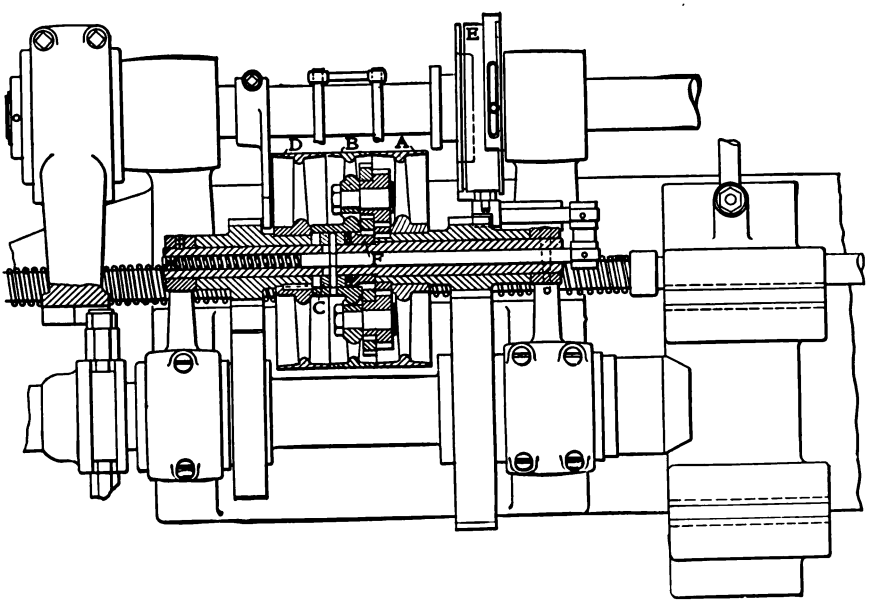

FIG. 53—Third spindle-speed attachment.

ment is designed to be used in cases where the forming to be done is too long for one forming tool and without this attachment would have to be partly formed on the automatic machine and finished by a second operation in another machine. By using the independent cut-off device two forming tools can be used; one on the front of the cross slide and one on the rear; the piece being cut off by the attachment which is in no way connected with the cross slide, but rests on the hood of the live

Digitized by Google

spindle and the cam shaft, and is operated by a cam on the latter. In this way the piece is completely finished on the automatic machine.

THIRD SPINDLE-SPEED ATTACHMENT

Another important device is the third spindle-speed attachment by which a slow spindle speed forward is obtained in addition to the regu-

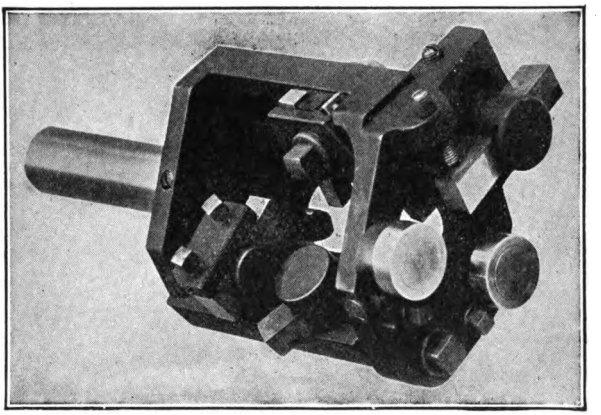

FIG. 54.—Roller rest box tool.

lar forward and reverse speeds. This attachment is of service especially when taking heavy cuts or threading work of large diameter and coarse pitch. With the belt on pulley *A*, Fig. 53, the normal speed is obtained;

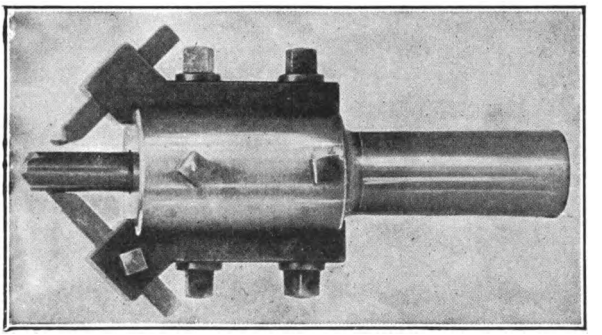

FIG. 55.—Combination drilling and chamfering tool.

with the belt on pulley *B* and clutch *C* in operative position, the slow spindle speed is derived through the medium of the planetary gears. When the belt is on pulley *D* the rapid reverse speed is secured for backing off the die or for cutting off the stock. Clutch *C* is controlled by

Digitized by Google

cams on drum *E* and is engaged with pinion *F* to hold the pinion fast when the spindle is to be driven at slow speed by operating the belt on pulley *B*. When the clutch is disengaged, releasing pinion *F*, *B* becomes a loose pulley.

An important attachment not shown here is a magazine for enabling the machine to handle small castings and forgings requiring operation on one or both ends.

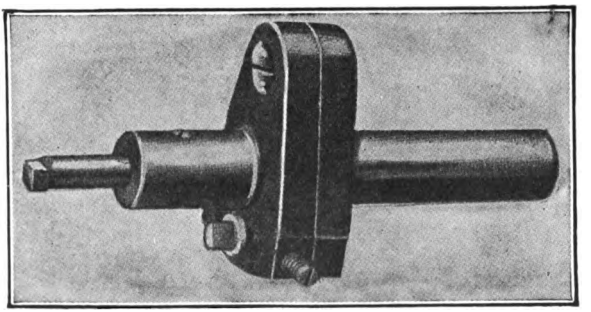

FIG. 56.—Adjustable boring tool.

TURRET TOOLS

A few typical turret tools are illustrated in Figs. 54 to 59. The first of these is a roller rest box tool with independently adjustable rolls to accommodate different sizes of stock, and with three turning tools adapted to be adjusted in the manner indicated. The block nearest the inner

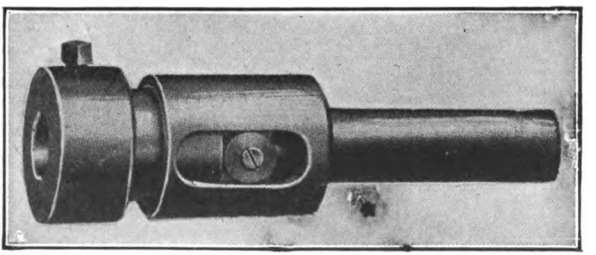

FIG. 57.—Tap and die holder.

end of the box tool carries an auxiliary steady rest with a roll at its end which may be applied when the work is reduced to such a small diameter that it is liable to spring away from the cutting tool which is shown opposite the rest in a vertical position. Fig. 55 shows a combination drilling and chamfering tool. Fig. 56 is an adjustable boring tool which may be used when it is necessary to secure perfect concentricity with the exterior of the work. Fig. 57 is a die and tap holder in which the

Digitized by Google

socket for the die or the tap is connected with the holder proper by a pair of rolls operating in oppositely located slots. This gives the threading tool considerable freedom longitudinally and assures accurate results even though the turret itself is not fed forward at the exact speed with

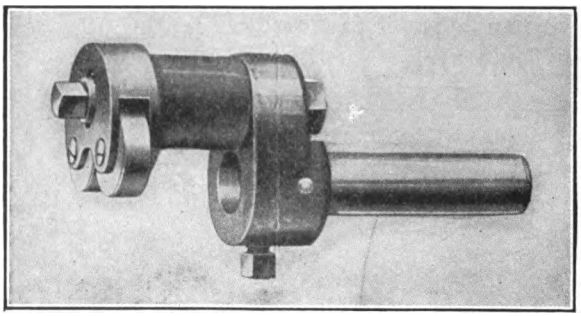

FIG. 58.—Roller steady rest.

which the die is drawn onto the work. Fig. 58 is a roller steady rest used where it is advisable to support a piece of work undergoing forming operations. The method of adjustment is sufficiently clear to require no explanation.

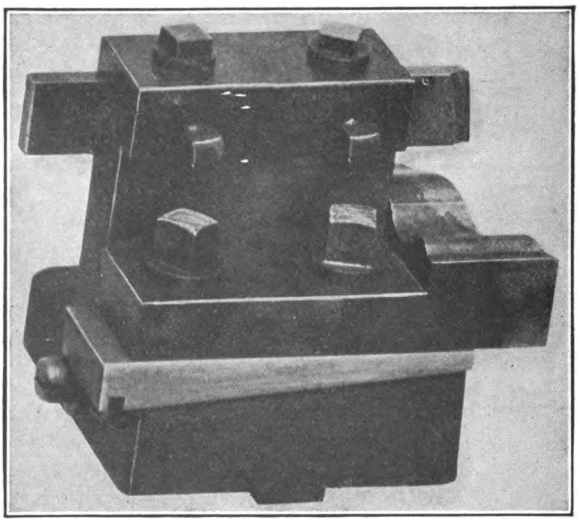

FIG. 59.—Combination undercut forming and cut-off tool.

COMBINATION UNDERCUT FORMING AND CUT-OFF TOOL

This style of tool, shown in Fig. 59, is used very extensively on the Cleveland machines. It will be noticed that it has an adjusting wedge so that the work diameter can be varied more or less. In using the form-

Digitized by Google

ing tool in combination with a cut-off tool, the undercutting tool is set in advance of the cut-off; in other words, it passes under the work, completing the outside of the piece and keeps in advance while the cut-off tool is severing the piece from the bar. In combination with the forming tool it rounds the corner or produces any shape desired before the cut-off tool on the opposite side of the slide has advanced to sever the piece.

MACHINE CAPACITIES

The regular turret machines of the type illustrated in this chapter are built in a wide variety of sizes; the smallest having a chuck capacity of ¼-inch and turning lengths up to 1⅛ inches, while the largest, which is intended for handling tubing of large diameter and for forming bevel gears and other parts from the bar, admits 6-inch material through the chuck and is capable of turning lengths up to 6¾ inches. A line of "plain automatics," operated on the same principle as the machine described, are built with a single tool head in place of the regular turret. These are intended especially for manufacturing studs, rollers, short screws, taper pins, etc., where the forming may be done entirely with the cross-slide tools. Several sizes of automatic chucking machines are also built by this company, these being adapted for finishing castings and forgings which are handled in jaw chucks or on face plate fixtures. These machines, in general design and operation, are similar to the regular turret machine illustrated.

Digitized by Google

CHAPTER VI

THE ACME MULTIPLE-SPINDLE AUTOMATIC SCREW MACHINE

The multiple-spindle automatic screw machine built by the National Acme Manufacturing Company, Cleveland, Ohio, is illustrated in its latest form with single-belt drive in Figs. 60 and 61. When equipped

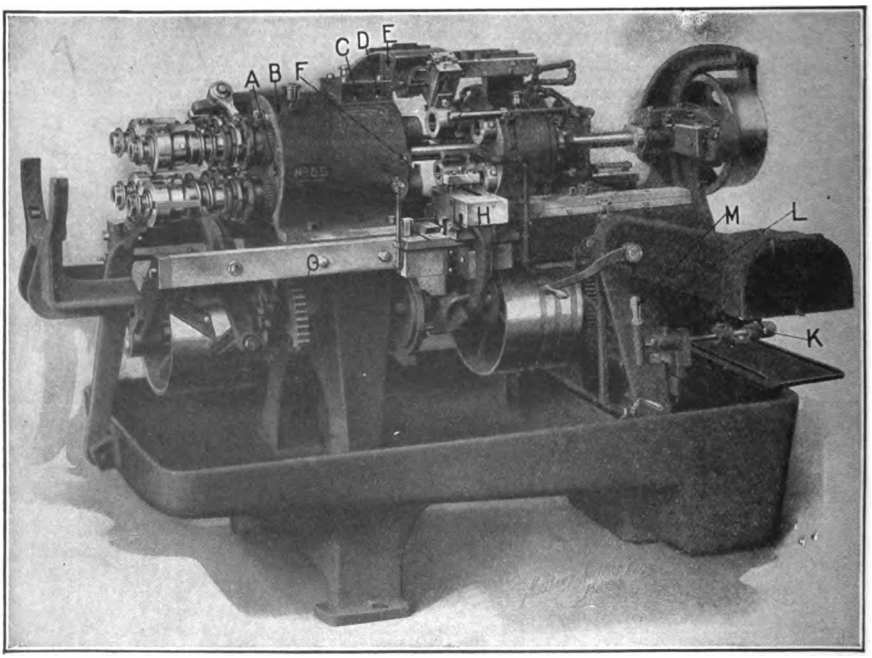

FIG. 60.—Acme multiple-spindle automatic screw machine.

for motor drive the single driving pulley is replaced with a spur gear and the motor connected to this is carried on a bracket placed at the left of the gear.

The machine as shown consists primarily of a cylinder *A*, Fig. 60, holding four stock-carrying spindles and a series of slides carrying tools which operate on all four bars from the side, top, and end at one time.

As there are two slides operating from opposite sides of the machine,

Digitized by Google

two from the top and one (the main slide, which is capable of carrying four tools, one for each spindle) from the end, it is possible to use eight separate tools at one time—two on each bar, one from the end and one from the side.

After a bar has been operated upon in the first position by one pair of tools, it is carried on to the next pair by the cylinder which is indexed by quarter turns. In this manner, after three sets of tools have finished their work upon the piece, it is carried to the fourth position where the

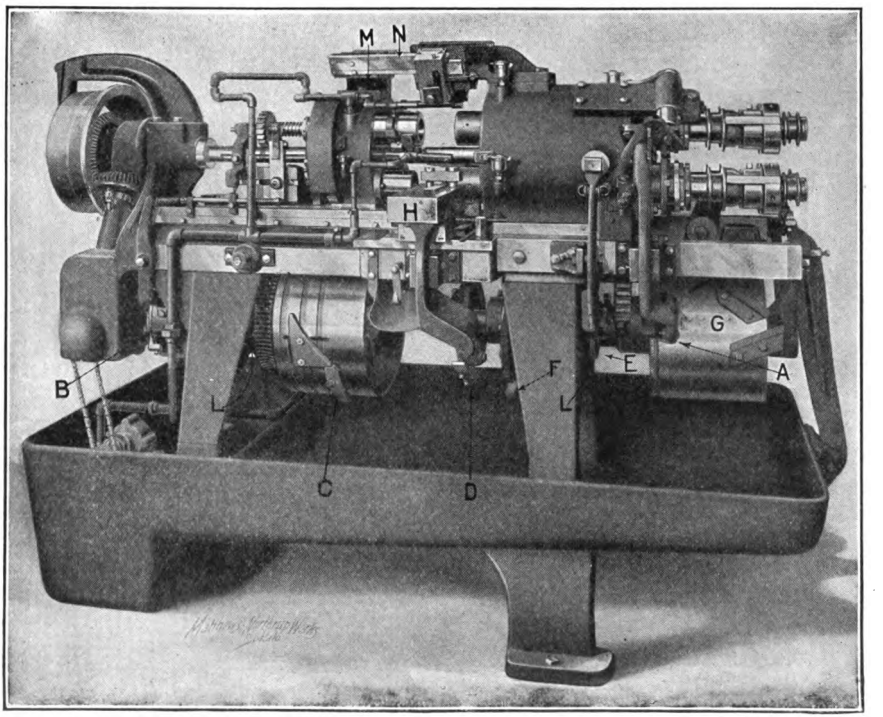

FIG. 61.—Acme multiple-spindle automatic screw machine (rear view).

final tools (one of which is a cutting-off blade) operate upon it. This gives a finished piece at each quarter turn of the cylinder. As all tools work simultaneously, the time required for the longest single operation is the time necessary to finish the piece.

It is frequently possible to combine two or more tools, such as a box tool and a drill, two dies, die and tap, drill and countersink, etc., or to use special attachments, described later. In such cases more than eight operations are readily performed.

The stock is fed in the manner generally adopted on automatic screw

Digitized by Google

machines, all movements being cam controlled and positive. The length of feed and position of the gage stop are easily changed to meet the requirements of the work in hand. The gage stop on this machine does not occupy one of the end tool positions, but is so arranged that the stock is fed against it during the quarter turn of the cylinder on the smaller machines, and just before the tools engage the stock in the first position on the larger sizes, the stop being swung back to allow the tools to come into contact with the stock.

DRIVING AND SPEED: CHANGING MECHANISM

The drive to the four work spindles is transmitted by the longitudinal shaft and connecting gearing as illustrated in the general views and in Fig. 62, and the speed-changing mechanism and cam-shaft drive are arranged as represented in Fig. 63.

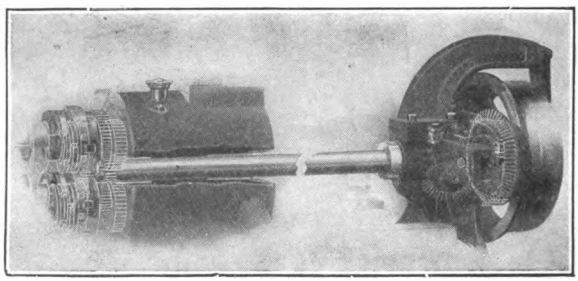

FIG. 62.—Acme spindle drive.

A change-gear system is used in connection with these mechanisms in order to transmit driving power, as well as facilitate rapid changes in the spindle speeds and tool feeds.

The stock-spindle speeds are controlled by back gears *A*, Fig. 63. When running direct, gears on the stub *B* are slipped out of engagement with those on the pulley hub and top shaft, or removed entirely.

Direct drive is obtained by first sliding gears on the stud out of mesh, then binding together thimble *C* and pulley (or gear, if motor driven), with the two screws furnished for this purpose. When changing from direct speed, the two thimble screws are removed before placing the gears on the stud in mesh with the gears on the pulley hub and shaft. To change the spindle speed, the vertical section of overhanging arm *D* is removed by removing screw *E*, after which thimble *C* is removed, the pulley (or gear, if motor driven) slipped off of the top shaft and the gears slipped from the hub of the pulley and stud, replacing with the gears to be used.

Digitized by Google

FEED CHANGES

Feed-rate changes are controlled by gears *F*, Fig. 63, through which the cam shaft is operated. The idle movements of the machine (those which occur when the tools are not operating on the work, such as feed-

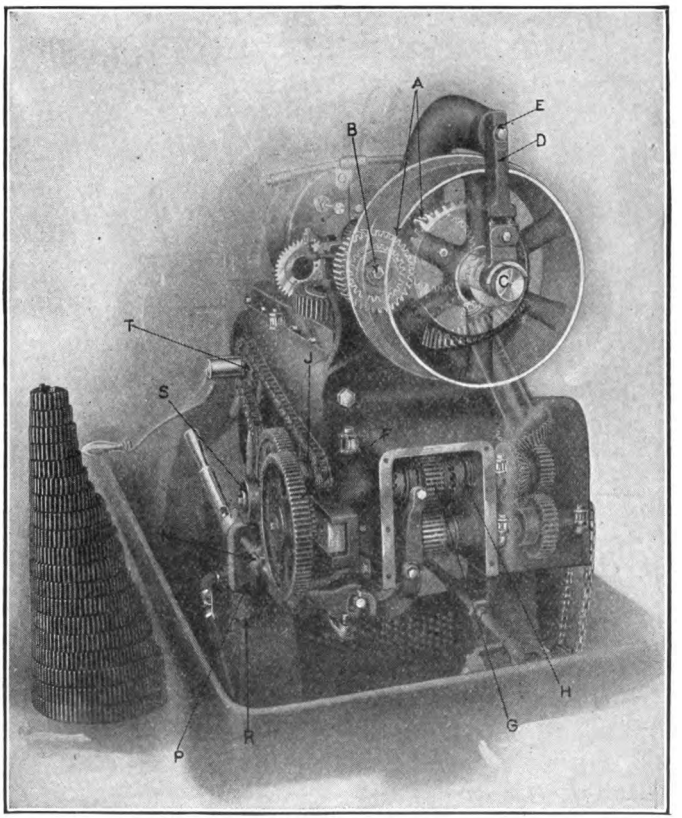

FIG. 63.—Spindle and cam shaft change gear and driving mechanism.

ing in of the rods, indexing of cylinder, movement of tool slide toward and from the work, etc.) occur when the machine is running at the constant or direct speed, or when sliding clutch *G* is engaged with the teeth in clutch collar *H*. Through the use of roller clutch *J* the feed-change gears remain idle during these movements. Various classes of work can be produced at a higher rate than is provided by the direct-feed drive. This is accomplished by the use of certain combinations of change gears and is clearly set forth in a gear table, supplied with the machine. The shifting of sliding clutch *G* is controlled automatically by arm *K*, Fig. 60,

Digitized by Google

operated by dogs or cams on drum *L;* also by hand lever *M*. With the hand lever to the extreme right, arm *K* is removed from the zone of the dogs or cams on drum *L,* and the feed mechanism is rendered inoperative, except on the slow or cutting speed. The lever cannot be moved in this direction during the idle movements, or when the feed mechanism is being operated on the direct or fast speed, and when in this position cannot be moved to throw the sliding clutch in engagement with the teeth of the direct-drive clutch, thereby eliminating the possibility of trouble which might be caused by jamming the tools against the work on the fast or direct speed. This hand lever will be found very convenient during the work of setting up the machine, as by its use the amount of hard cranking can be very materially reduced.

Clutch *G,* Fig. 63, should always be in a neutral position when the hand crank is being used. The shifting action of this clutch may be regulated by slight adjustment of angular cam *N,* and its proper engagement with the stationary clutches is assured by tension on the spring which operates plunger *P,* this tension being increased if found necessary by turning nuts *R* to the right.

Frictions *S* and *T* are employed in connecting the feed-change gears to the sprocket shaft and the small sprocket to the worm shaft, their use being a safety measure as they will slip in case of accident causing unusual strain on the machine, and thus prevent the breakage or distortion of the more vital parts of the mechanism.

CAMS AND CAM SHAFT

The cam shaft carries the drums and disk to which are attached the cams which control the several movements of the machine, and in addition the indexing segment for the cylinder carrying the four work spindles. The proper indexing of the cylinder depends upon the indexing segment, and especially upon the last tooth, which is made adjustable to compensate for such gear as may occur at this point.

To drum or disk *B,* Fig. 61, are attached the cams or dogs which operate the lever controlling the change from the idle to working speeds of the machine, and with the exception of machines Nos. 51, 515, and 52 the lever operating the thread-starting mechanism.

Cam drum *C,* Fig. 61, operates the main tool slide, and on machines Nos. 51, 515, and 52 the thread-starting mechanism. The grooves in this drum are for what are known as the "backing-up" strips, which are used to relieve the strain on the screws that hold the lead cam—the cam which feeds forward the main tool slide. The cross slots in this drum provide for adjustment of the cam which controls the rapid movement of the tool slide toward the work before the cuts are started.

Digitized by Google

Disk *D*, Fig. 61, carries the cams which operate the cutting-off and forming tool slides. There are two sets of screw holes in this disk for locating the cutting-off cam, one set of holes to be used when there is no operation to be performed from the fourth position of the main tool slide, the other when this position is used. It is necessary to use the extra set of holes when an operation is being performed in the fourth position from the main tool slide in order to delay the cutting-off operation until the tool slide recedes sufficiently to allow the tools in the fourth position to clear the work before the piece is entirely cut off.

Disk *E*, Fig. 61, operates the cylinder-locking levers. On the small machines this disk is outside the leg. Disk *F* operates the oscillating gage stop on machines Nos. 53, 54, 55, and 56. Machines Nos. 51 to 52 are equipped with stationary gage stop and this disk will, therefore, not be found on these machines. Cam drum *G* carries the cams which operate the frictions, chucking and non-chucking levers, and feeding mechanism. Cam shaft end play is taken up by collars at *L*.

THE WORK-SPINDLE CYLINDER AND CYLINDER CASING

The cylinder *A*, Fig. 60, for the work spindles is of gray iron, the bearing surface of which is ground to size. The internal surface of the cylinder casing *B* is also ground to size; compensation for wear of either the casing or cylinder being provided by a slot in the casing. Contraction and expansion of the casing is controlled by screws *C* and *D*. To contract the casing loosen the screws in top bracket *E*, turn screw *C* to the left, and screw *D* to the right. When proper adjustment is secured turn screw *C* to the right. To expand the casing turn screw *D* to the left, then screw *C* to the right, after which screw *D* to the right. Longitudinally the cylinder is held in position in the cylinder casing by a flange on the cylinder and adjustable clips *F*. When the cylinder is indexed by the segment gear *G*, Figs. 60 and 64, it is brought into correct position by plunger *M*, Fig. 64, when the proper alignment adjusting screw *N*, Fig. 64, is resting upon half-round plunger *P*. Plunger *M* is designed to enter only a short distance into bushing *R*, the tapered portion of the plunger striking the upper wall which, with the assistance of springs *S*, insures perfect contact between adjusting screw *N* and half-round plunger *P*.

WORK SPINDLES, BEARINGS, ETC.

The work spindles are of steel, chucks of the push type being used. Each nose piece is ground in place on its spindle. Bronze parallel bearings are used in the cylinder. The front and rear tapered bearings are

Digitized by Google

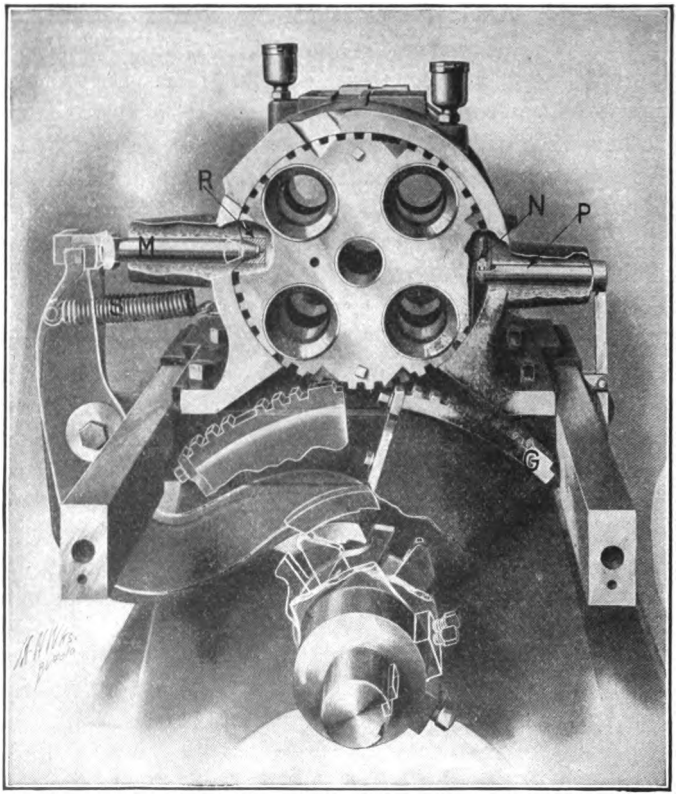

FIG. 64.—Indexing and locking mechanism.

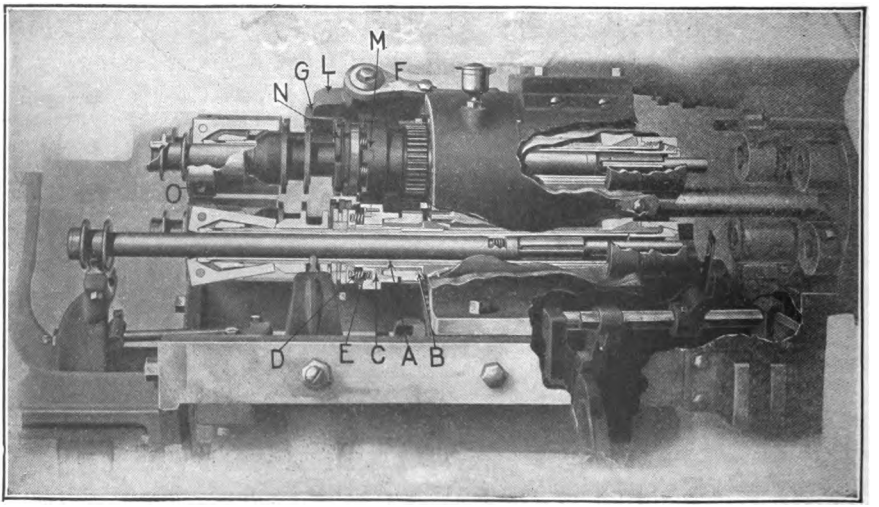

FIG. 65.—Spindle construction.

Digitized by Google

of bronze, both running in hardened and ground steel bushings. The longitudinal movement of the spindles is adjusted for end play by turning collars *N*, Fig. 65. To adjust the chucks to the rods, finger-holder *O*, Fig. 65, should be turned to the right (after first unscrewing the set screw) if it is desired that the chucks grip the stock tighter, or if less tightly, to the left, the set screws being tightened after the proper adjustment has been secured. The feed chucks are threaded to turn right-handed and fit closely in the feed tubes to prevent their coming loose when the machine is in operation. As the work spindles rotate to the left the nose pieces have left-hand threads.

FRICTIONS

The friction spindles, Fig. 65, which make it possible to hold one work spindle stationary while the remaining three continue to rotate, are made up of four principal parts, viz.: sleeve *A;* male tapered section and gear *B;* female tapered section *C;* spring seat *D*. The work spindles as already stated are driven by a gear attached to the spindle-driving shaft meshing with the geared portion of the male tapered section *B*, engaging female tapered section *C*, which is keyed to sleeve *A;* sleeve *A* being keyed to the work spindle. Sections *B* and *C* are held in engagement by springs *E*. When sections *B* and *C* are not engaged, section *B* not being keyed to sleeve *A* rotates freely on it, and section *C*, sleeve *A*, and the work spindle remain stationary. Disengagement of members *B* and *C* resulting in the work spindle being held stationary is necessary, while threading, cross-drilling, side milling, or other special operations of this nature are being performed. Where the friction caused by lever *F* compressing springs *E* is insufficient to hold the work spindle stationary, which may be the case when cutting coarse threads, adjustable plunger *G* located on the under side of bracket *L* (which bracket is attached to the cylinder casing) is brought into contact with lug *M* inserted in section *C* of the friction. This will prevent rotation of the work spindle during the threading operation. The length of time the work spindle must be held stationary is determined by the duration of the threading or special operations. The opening and closing of the friction is controlled by cams on cam drum *G*, Fig. 61, operating through a roll, lever *A*, and a toggle-locking device. The opening cam is positive, while the closing cam is adjustable on the cam drum. In the larger machines positive clutches are used in place of frictions to provide against slipping; these are operated in the same manner as the frictions on the smaller machines.

Digitized by Google

MAIN TOOL SLIDE

The main tool slide, Fig. 66, carries the tools usually carried in the turret of single-spindle machines, *i.e.*, those worked from the end. Four is the maximum number of tools it will accommodate, although by the use of combination tools in these positions, more than four operations may frequently be performed. The locations of the several tools are

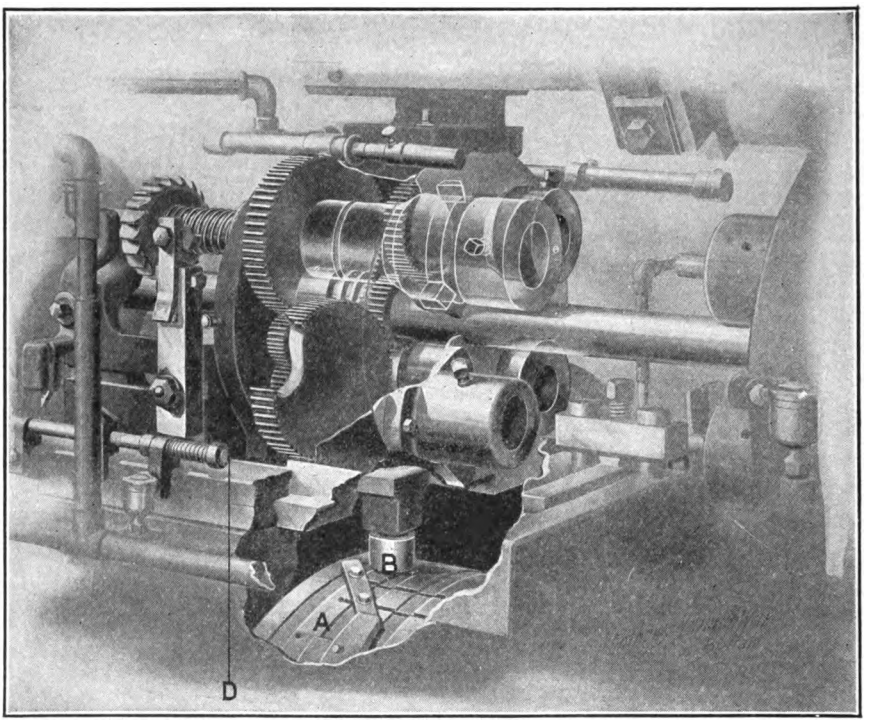

FIG. 66.—Main tool slide.

designed as "positions." The first is the position from which the tools engage the bar on which the forming tool is operating. The second, that above and vertically parallel to the first position; the third, opposite to and horizontally parallel to the second position; the fourth, below and vertically parallel to the third position.

The tool slide is moved toward and from the work by cams bolted to cam drum *A*, Fig. 66, operating on a roll attached to adjustable slide *B*, which is bolted to the body of the main tool slide.

It is good practice to have the shanks of tools extend as far back in the tool spindles as possible in order to secure increased rigidity. To

Digitized by Google

make this possible two methods of adjustment are provided when changing from long to short work and vice versa, viz., the changing of the position of the lead cam on the cam drum, also that of adjustable slide *B*, Fig. 66.

When it is necessary to form an operation from the fourth position in the tool slide, about 4 inches should be taken off the wide end of the lead cam on Nos. 53 to 56 machines inclusive, and about 3 inches on the Nos. 51 to 52 machines. This is done to allow the tool in this position to clear the work before the piece is cut off.

If desirable, the tool spindle in the second position can be rotated by means of the gears driven by the sliding gear keyed to the spindle-driving shaft for driving the threading spindle. The back plate attached to the rear of the vertical portion of the tool slide with screws and spacing collars carries a stud upon which the intermediate gear that drives the

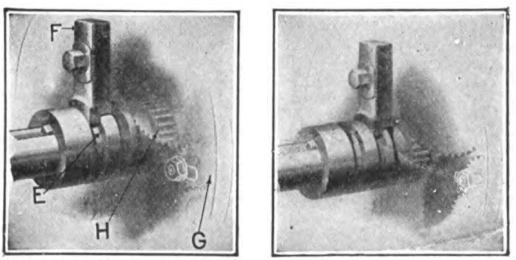

FIG. 67.—Speed change gear for threading spindle.

tool spindle in this position rotates. This spindle may be driven by loosening a collar at the rear sufficiently to allow it to rotate freely, unscrewing a nut on the stud and moving the stud sufficiently to bring the intermediate gear into mesh with the gears on the spindle-driving shaft, then tightening the stud again by screwing up the nut. The rotation of the second position tool spindle is found very convenient in cases where a very small hole is to be drilled. Screws are provided for use in adjusting the position of the individual tools in the tool slide and also serve as a gage stop in resetting tools in their original positions after they have been removed from the slide.

THREADING MECHANISM

The threading mechanism is so constructed as to allow for the threading operation as much time as is consumed in the longest milling, drilling, or forming operation, thus insuring good threads, and long life for the threading tools.

Oil is forced through the die spindle into the die from the rear, thus

Digitized by Google

providing ample lubrication. The die spindle is rotated by means of sliding gear *E*, Fig. 61, which is keyed to and driven by the top shaft. When the die spindle is not in use clip *F* can be raised and the gear slipped out of mesh with the threading-spindle gears. When clip *F* is in engagement with the groove nearest the teeth in gear *E* the threading spindle sleeve will be driven direct and at its highest rate of speed. When clip *F* is in engagement with the groove farthest from the teeth in gear *E* the sleeve will be driven through the intermediate and compound gears *G* and *H* at its lowest rate of speed. The threading-spindle sleeve rotates about seven times as rapidly when driven direct as when driven through intermediate and compound gears. In threading brass

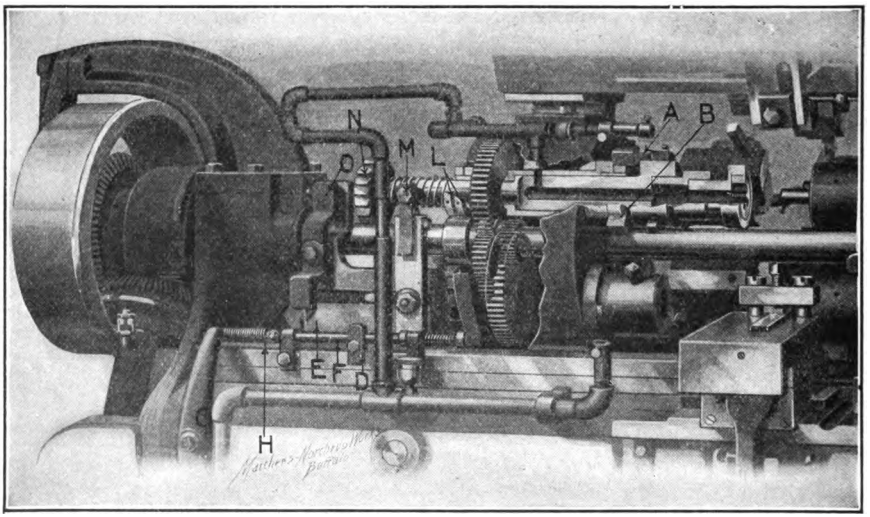

FIG. 68.—Threading mechanism.

or cutting very fine threads on soft steel, the direct drive may be used. In most other cases it is advisable to use the intermediate drive.

The threading spindle is driven by pins *A*, Fig. 68, attached to the threading-spindle sleeve, engaging pin *B* in the spindle. Pin *B* is adjustable for length, this adjustment being used when the pitch of the thread is such that the forward travel of the tool must be faster than that of the tool slide. These pins are furnished in various lengths. When the tool becomes slightly dulled, or when the die has a shallow throat (which is necessary when the thread is to be cut close up to the head or shoulder of the work), the device in Fig. 68 is brought into use. This is known as the thread starter and operates as follows:

At the time the tool is in position where it just touches the end of

Digitized by Google

the blank to be threaded, roll *D* should be adjusted so as to be brought into contact with swinging pawl *E*, the roll holder being adjustable on rod *F*, which is operated by an adjustable cam on cam drum *B* (Fig. 61), through lever *G*, Fig. 68. Spring *H* compensates for any slight variation there may be in the length of the blank, making the starting of the tool positive, but the operation of the mechanism flexible. End play in the threading-spindle sleeve is taken up by collars *L*.

After the tool has completed the operation of threading, the work spindle is released (as explained in connection with the operation of the frictions) and the tool runs off when the ratchet *N* on the rear end of the die spindle engages flexible pawl *M*, all receding with the tool slide. In setting tools for threading, before starting the machine the ratchet should clear flexible pawl *M* from $\frac{1}{8}$ to $\frac{3}{16}$ inch when pins *A* and *B* on the threading-spindle sleeve and spindle are placed end to end. With the regular threading mechanism only right-hand threads can be cut, but the machine can be equipped with left-hand threading attachment when so desired.

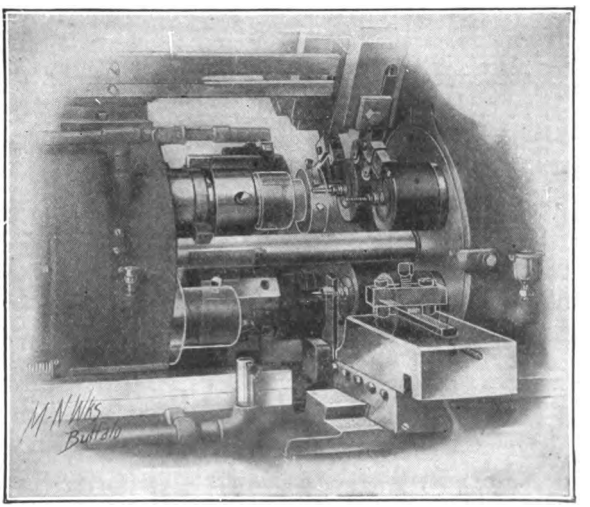

FIG. 69.—Four spindles and tool positions.

FORMING AND CUTTING-OFF SLIDES

These slides are made adjustable for position lengthwise of the machine. This makes it possible to change the longitudinal position of the cutting-off and forming tools without disturbing the tools themselves. The cutting-off tool when of the blade variety is adjustable for height by means of a screw in the slide. A gage for setting the forming tool to the proper height is furnished with each machine.

Digitized by Google

On machines Nos. 52, 55, and 56 both the levers which operate the forming and cut-off slides *H*, Figs. 60 and 61, and the bracket in which they are pivoted, are drilled in two separate locations. This double drilling makes it possible to form deeper and cut off larger diameters of stock when the levers are pivoted in the lower holes without substituting cams of a greater throw or travel, as designated in a table accompanying the machine.

TOP SLIDES

Two of these slides are provided, operating in second and third positions as represented in Figs. 60 and 61. They are adjustable length-

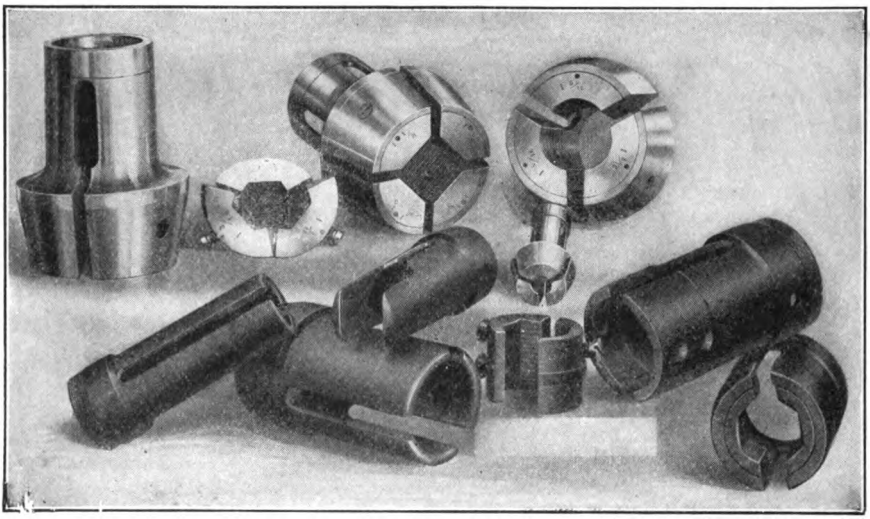

FIG. 70.—Spring-collets and feed chucks.

wise of the machine and are used for knurling, thread-rolling, shaving light forming, etc., and are very useful in producing many varieties of work. Their operation is provided for through bar cams attached to the tool slide. Cam *M*, Fig. 61, moves the top slide toward, and cam *N* from the work. These cams can be readily filed to any angle, thus providing whatever feeds may be deemed desirable for the tools in use. In operating tools in these top slides, care must be exercised in having cam *M* notched and the tools so set that the slides will be in their original position and the tools out of the way before the indexing of the cylinder carrying the work spindles takes place.

The cams rarely need changing as the set provided with the machine covers a wide range of work; extreme cases, however, require a faster or a slower feed.

Digitized by Google

TOOLS AND ATTACHMENTS

Fig. 69 illustrates the machine as it appears equipped with tools for each position for operation on four rods at the same time. Fig. 70 is a group of collets, feed chucks, and jaws.

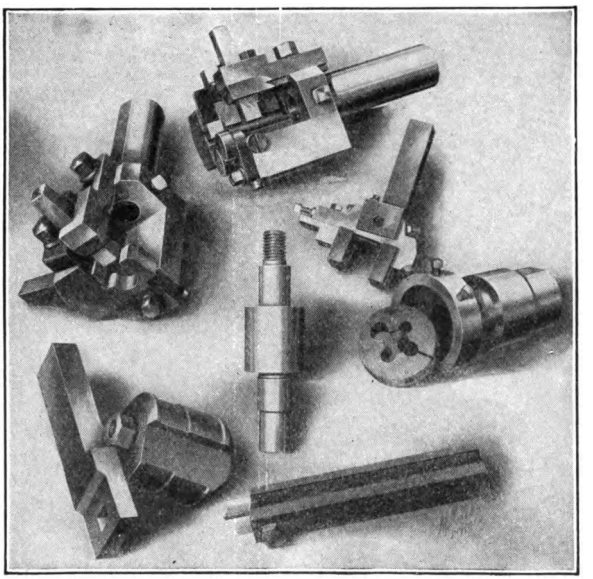

FIG. 71.—Set of tools for machining a stud.

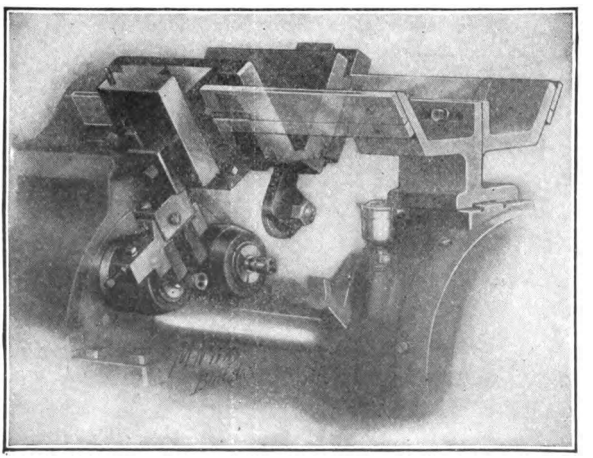

FIG. 72.—Shaving and thread-rolling tools in position.

Fig. 71 is a set of tools for machining a stud shown at the center of the group. As this work is indexed through the four positions, the tools

Digitized by Google

operate as follows: Forming tool and lower box tool in the first position; shaving tool and box tool with roller rest, second position; die in the third and cut-off tool in the fourth position. The shaving tool shown just above the die is mounted in the machine as illustrated in Fig. 72. It consists of a holder carrying a rest and a shaving blade, the holder being pivoted to allow the blade and rest to find their own center. As the distance between blade and rest when once set is positive, and as the tool is allowed to find its own center, it produces very accurate results.

The thread-rolling tool mounted as shown in Fig. 72 is especially adapted for rolling a thread at the back of a shoulder. It consists of a

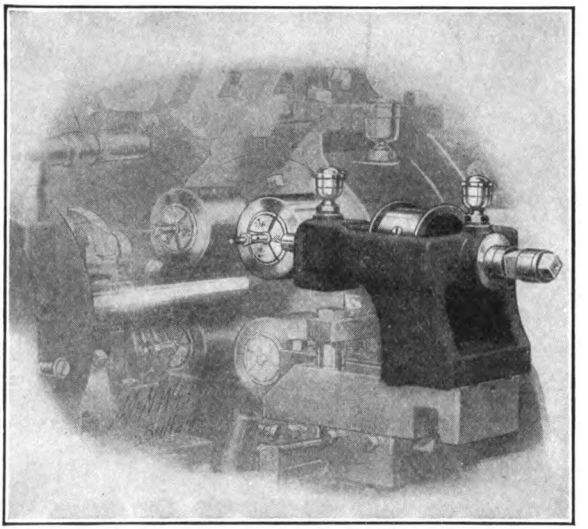

FIG. 73.—Cross-drilling attachment.

thread roller mounted in a holder which is secured in the rear top slide. It produces smooth, accurate threads and is obviously applicable to many cases where a die cannot be operated. At the same time it may be used satisfactorily at the front side of a shoulder where ordinarily a die would be employed.

CROSS-DRILLING ATTACHMENTS

The cross-drilling attachment shown in Fig. 73 is operated in the third position, where provision is made for stopping the rotation of the stock to allow for threading and other operations. The attachment is secured to the cutting-off slide and actuated by the cutting-off lever. On the larger sizes of machines sufficient feed for the drill is obtained by an auxiliary lever at the side of the attachment, which increases the throw

Digitized by Google

of the cam. Adjustments are provided for governing the depth and position of the hole in the work. The drill spindle is operated by a belt

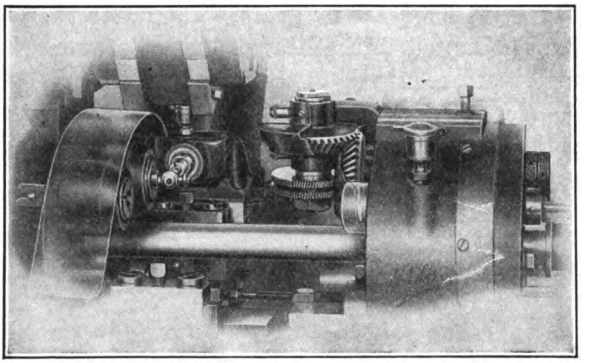

FIG. 74.—End-milling attachment.

from a countershaft. By using a combination tool it is possible to drill and countersink a hole at the same time.

Cross drilling from the top of the piece may be accomplished by means of an attachment used in place of the top slide over the third

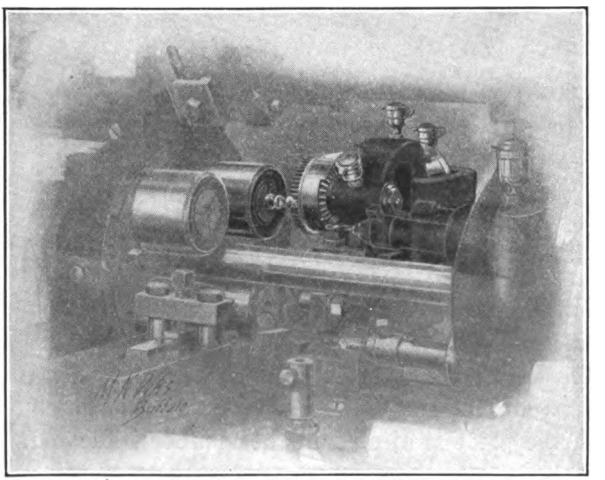

FIG. 75.—Side-milling attachment.

position. This attachment may also be used in conjunction with the one on the cutting-off slide, the holes being drilled at a given angle to each other. Also, when required, the machine may be modified to allow the two holes to be positioned at any angle with each other between 90 degrees and a few degrees from parallel.

Digitized by Google

MILLING ATTACHMENTS

There are two forms of end milling attachments for the machine, one being driven by belt; the other by gears. The latter type is illustrated in Fig. 74, and is adapted to the heavier classes of work; for example, where two cutters are required. These attachments are operated from the main tool slide, opposite the third stock position owing to the necessity of having the stock stationary during the drilling operation. Either attachment can be used in conjunction with cross-drilling or side-milling

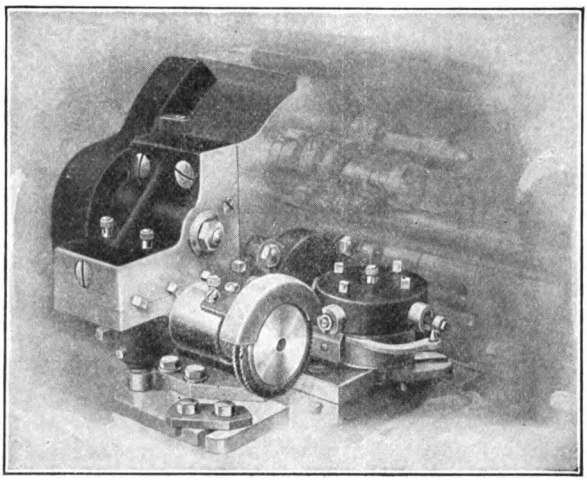

FIG. 76.—Slotting and milling attachment.

attachments, but are not applicable where threading operations are required, as their position on the machine is then occupied by the threading spindle.

A side-milling attachment is shown mounted on the cross slide in Fig. 75; and in Fig. 76 a slotting attachment is illustrated, the work handled in this device being received from the spindle by a turret holder and carried around in front of the saw or saws as the case may be. After the operation the piece is ejected in the manner indicated.

Digitized by Google

SECTION IV

SCREW MACHINE TOOLS

METHODS OF MAKING AND USING THEM

CHAPTER VII

AUTOMATIC AND SEMI-AUTOMATIC CHUCKING AND TURNING MACHINES

As already noted, there are many automatic and hand-operated screw machines and turret lathes which cannot be described in this treatise

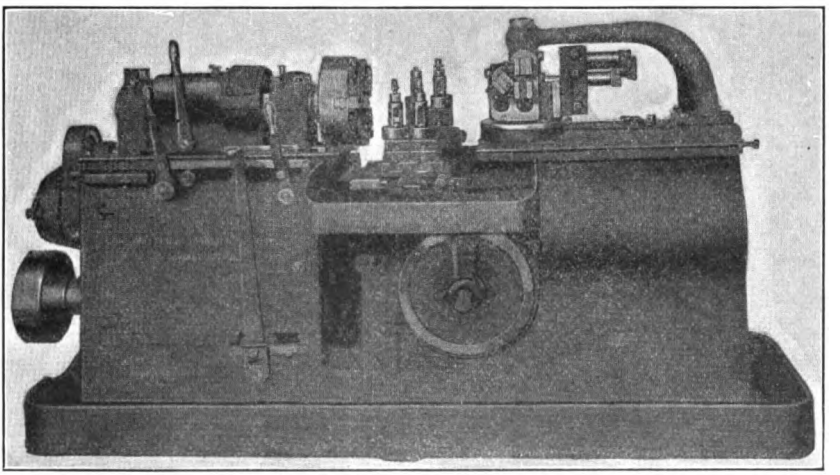

FIG. 77.—Potter & Johnston Manufacturing automatic machine.

owing to space limitations. Among such machines are the magazine type where castings and forgings are fed down a chute into the chuck and machined as if produced from the solid bar; double-end machines for operating on both ends of a piece simultaneously; and a number of multiple-spindle as well as numerous single-spindle machines of full automatic, semi-automatic and hand types.

Digitized by Google

Among important machines for the automatic or semi-automatic production of parts from castings and forgings, or from bar stock up to large diameters, are the Potter & Johnson; the Gridley type of automatic as made for piston rings and similar work; the New Britain Machine Company's automatic with multiple-spindle construction for a wide variety of work either cast or forged, or to be finished from parts already operated on at one end in a bar stock machine.

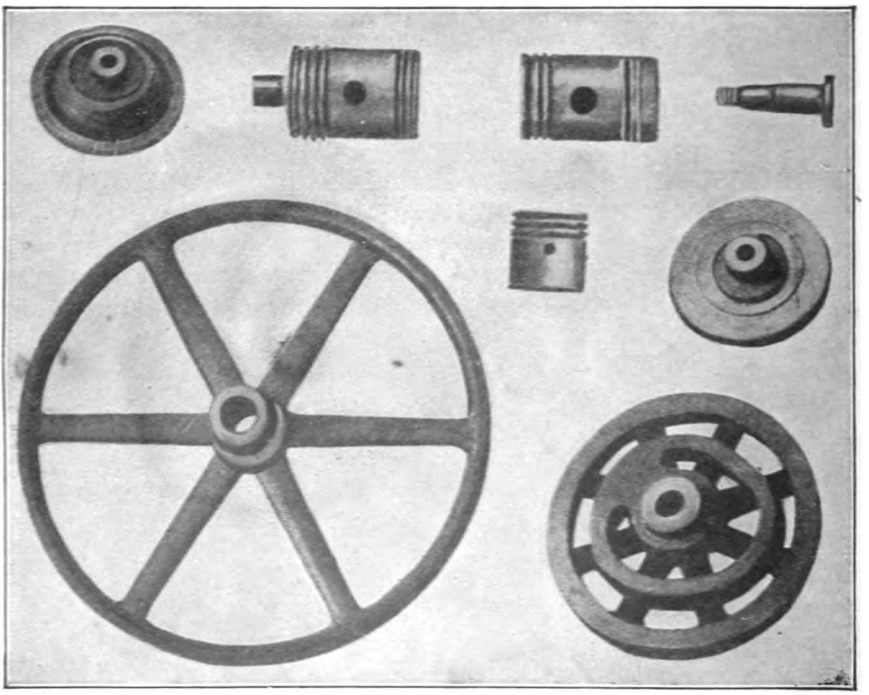

FIG. 78.—Some of the work done on the Potter & Johnston machine.

The "manufacturing automatics" or Potter & Johnston, Pawtucket, R. I., are of the type represented in Fig. 77, the capacity being such that work such as fly wheels, for example, up to 40 inches diameter may be handled in the chuck. With the work secured in the chuck, all operations with the turret and cross-slide tools are carried on automatically until the piece is finished. A typical group of parts as machined on this type of automatic tool is shown in Fig. 78.

Digitized by Google

CHAPTER VIII

POINTS IN SETTING UP AND OPERATING AUTOMATIC SCREW MACHINES

In the following pages a few general suggestions are given which may be of interest to operators before considering in detail the different types of tools, determination of speeds, feeds, etc., treated fully in Chaps. IX and XVI.

It should be borne in mind that the automatic screw machine necessarily has more complicated mechanism than a hand-operated machine, as many movements must be performed automatically, which in the hand type of machines are accomplished by the operator. The automatic machines must, therefore, have the more careful attention in setting up for turning out work. When, however, the machines are properly adjusted, very little attention over that required on a hand machine is needed, although the use of dull tools must be particularly guarded against. The machines must be carefully erected and leveled up so as to avoid poor alignment between head spindle and turret, etc.

OPERATOR'S DUTIES

Ordinarily a workman will readily attend to six machines and on very simple straightforward work may economically look out for more. He should become thoroughly familiar with the machine operations and adjustments before putting in tools or starting up, and it is generally well first to operate the machine by hand before putting on power.

Assuming that a new piece of work is to be produced on an automatic screw machine, it is well to consider first the various ways in which the work may be machined, and to give due consideration to the tool equipment available and to the quantity of pieces to be made, and then decide upon a satisfactory method.

TOOLS AND COLLETS

The making of special tools and the changing of the camming of the machine (if any) must then be attended to. All tools and holders must be made accurately to give correct results, and in addition it is always advisable to check the first few pieces produced, by gages or

Digitized by Google

otherwise, to see that the pieces are of the correct dimensions. The collet should grasp the rod the entire length of the bearing surface, and have a tendency to bite harder on the front end than at the rear. This affords rigidity to the work when a cross-forming operation is being performed. The front end of the collet should likewise have a good bearing in its seat. The collet when closed must firmly grip the rod so as to prevent any slipping under the action of the cutting tools.

HANDLING MATERIAL

The feeding chuck must have sufficient grip to feed the rod accurately without undue marring of the material upon its return stroke. It is generally considered well to straighten the bars of stock if they are bent, and also to gage them for diameter and to stack them into separate bundles if there is an appreciable variation which would cause difficulty when machining, and afterwards to make adjustment of the collets, etc., to suit the various sizes as worked up.

Where different qualities of steel are being used, extreme care must be taken to prevent mixing in a hard tool steel bar with the soft steel stock from which the work is supposed to be made; as the speed of the spindle and the feed may be such as to ruin expensive tools.

TOOL AND OTHER ADJUSTMENTS

It is, of course, obvious that the lubricating pump should be known to be properly working and all cutting tools properly set with regard to the work and their cutting edges properly ground in order to get good results.

The head spindle bearings must be adjusted so as to permit running of the spindle at satisfactory speed without unreasonable freedom—else trouble will arise from this source. The cross slide, turret and turret-slide bearings must also be carefully adjusted and kept in good condition.

The selection of the proper spindle speeds for various jobs, as well as the determining of satisfactory feeds, should be considered carefully. In the next chapter are tables which should be helpful in this connection.

PRODUCTION

The rate of production is dependent not only on the rate of feed and spindle speed, but also on the tool equipment. The production of threaded work especially is facilitated by employing tools so designed as to take advantage of two speeds and to cut when the spindle is reversed.

The camming should be such as to permit the performing of several operations simultaneously, such as drilling from the turret and forming from the cross slide.

Digitized by Google

MANIPULATION OF TOOLS

When changing the tool equipment from one piece to another the seat in the head spindle for the collet must be thoroughly cleaned as well as the collet, so as to avoid eccentricity in the operation of the rod due to foreign matter, when the stock is grasped by the collet.

It is well before dismantling tools to make a model on the automatic screw machine for convenience in setting up in the future. This model should be complete in all respects, but should not be fully cut off to its usual length. It should be left intact, with sufficient length of the bar to permit grasping by the collet, allowing the model to be the proper working distance from the end of the spindle. The illustration in Fig. 79 shows two models with the piece of stock by which they are held when setting up for the production of similar work.

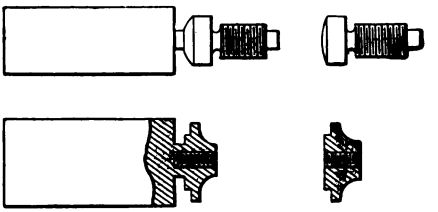

FIG. 79.—"Setting up" models for the screw machine.

BELTS, OILING, ETC.

It is recommended that belts without rivets be used for the spindle drive as they run smoothly at high speed. Laced wire also makes a smoother running belt than where leather lacing or hooks are used for coupling the ends together. On machines where the belts are shifted to change a spindle speed or the direction of rotation, double belts will be found superior to single belts as the former being of stiffer cross section may be more quickly moved and the results desired more quickly obtained.

The workmen in charge of machines should be instructed to lubricate all bearings frequently with good machinery oil and should be thoroughly familiar with the location of each hole and its function. Too much attention cannot be given to this if satisfactory continuous service is to be expected from an automatic screw machine.

The chapters that follow in this section describe in detail various classes of tools for screw machines and illustrate methods of making and using them. It is hoped that the information contained therein, with the chapters on camming and illustrations of tools in Chaps. II to V, may be of special interest and service to toolmakers, draftsmen and operators.

Digitized by Google

CHAPTER IX

SPEEDS AND FEEDS FOR SCREW MACHINE WORK

The ordinary class of screw machine tools, suitable speeds and feeds for which have to be determined when camming automatics, includes the various turning tools such as box tools (adjustable and non-adjustable), hollow mills, drills, reamers, counterbores, taps and dies, forming and cutting-off tools. The accompanying tables of speed and feeds for different types of tools used on materials commonly worked in the automatic have been compiled from data accumulated and thoroughly tested during extended experience in this class of work and have proved of value in the screw machine department, not only in connection with the handling of automatics, but also, to a considerable extent, on hand machines, although, naturally, the matter of feeds on the latter class of apparatus is largely regulated by the personal equation; the question of spindle speeds, however, is quite as important and as readily settled for hand machines as for automatics.

It is, of course, impossible, where a series of tools is used on an automatic machine providing say two rates of speed for the spindle for any given job, to select speeds theoretically correct for each and every tool carried by the turret and cross slide. A compromise is necessary and therefore speeds are selected which will fall within the range suitable for the different tools; in determining these surface speeds and the rates at which to drive the spindle to approximate closely the desired surface velocities, the tables should be found of service.

SPEEDS AND FEEDS FOR TURNING

Tables 15 and 16 cover turning speeds and feeds for bright-drawn stock (screw stock) and brass, with various depths of chip (that is, stock removed on a side) from $^1/_{32}$ inch up to $^3/_8$ inch. These speeds and feeds and depths of cut are figured more especially for such tools as roughing boxes where the cut, though frequently heavy, is taken by a single cutting edge, the work being well supported behind the cutter during the operation. Table 17 covers the same range of steel work as Table 15, but is laid out for hollow-mill operations; it will be noticed that, the cut being divided with this tool among three or more cutting edges, coarser rates

Digitized by Google

CUTTING SPEEDS AND FEEDS FOR SCREW STOCK.

1/32 Inch Chip				1/16 Inch Chip				1/8 Inch Chip			
Dia. of Stock	Feet Surface Speed	Rev. per Min.	Feed per Rev.	Dia. of Stock	Feet Surface Speed	Rev. per Min.	Feed per Rev.	Dia. of Stock	Feet Surface Speed	Rev. per Min.	Feed per Rev.
1/8	80	2445	.002	1/4	60	916	.0035	3/8	55	560	.004
3/16	70	1426	.003	3/8	60	611	.004	1/2	55	420	.005
1/4	70	1069	.004	1/2	60	458	.005	3/4	55	280	.006
3/8	70	713	.005	3/4	55	280	.006	1	50	191	.007
1/2	60	458	.006	1	55	210	.007	1 1/4	50	152	.007
3/4	60	305	.007	1 1/4	55	168	.007	1 1/2	45	114	.007
1	60	229	.008	1 1/2	50	127	.008	1 3/4	45	98	.007
1 1/4	60	183	.008	1 3/4	50	109	.008	2	40	76	.008
1 1/2	50	127	.009	2	45	86	.009	2 1/4	40	68	.008
1 3/4	50	109	.010	2 1/4	45	76	.009	2 1/2	40	61	.008
2	50	95	.010	2 1/2	45	68	.009	3	40	51	.008
2 1/4	50	85	.010	3	45	57	.009	3 1/2	40	44	.008

3/16 Inch Chip				1/4 Inch Chip				3/8 Inch Chip			
Dia. of Stock	Feet Surface Speed	Rev. per Min.	Feed per Rev.	Dia. of Stock	Feet Surface Speed	Rev. per Min.	Feed per Rev.	Dia. of Stock	Feet Surface Speed	Rev. per Min.	Feed per Rev.
1/2	50	382	.004	3/4	50	254	.004	1 1/4	45	137	.005
3/4	50	254	.005	1	50	191	.005	1 1/2	45	114	.005
1	50	191	.005	1 1/4	45	137	.005	1 3/4	45	98	.005
1 1/4	45	137	.006	1 1/2	45	114	.006	2	40	76	.006
1 1/2	45	114	.006	1 3/4	45	98	.006	2 1/4	40	68	.006
1 3/4	45	98	.006	2	40	76	.003	2 1/2	40	61	.007
2	40	76	.007	2 1/4	40	68	.007	3	40	51	.007
2 1/4	40	68	.007	2 1/2	40	61	.007	3 1/2	40	44	.007
2 1/2	40	61	.007	3	40	51	.007	4	40	38	.008
3	40	51	.007	3 1/2	40	44	.007	4 1/2	40	34	.008

TABLE 15.—SPEEDS AND FEEDS FOR SCREW MACHINE WORK.

Digitized by Google

CUTTING SPEEDS AND FEEDS FOR BRASS

1/32 Inch Chip				1/16 Inch Chip				1/8 Inch Chip			
Dia. of Stock	Feet Surface Speed	Rev. per Min.	Feed per Rev.	Dia. of Stock	Feet Surface Speed	Rev. per Min.	Feed per Rev.	Dia. of Stock	Feet Surface Speed	Rev. per Min.	Feed per Rev.
3/32	180	5500	.003	1/4	180	2748	.004	3/32	165	1680	.004
3/16	180	3668	.004	3/32	180	1833	.005	1/8	165	1260	.006
1/4	180	2748	.005	1/8	180	1374	.0065	3/16	165	840	.007
3/32	180	1833	.006	3/16	165	840	.0075	1	150	573	.008
1/8	180	1374	.008	1	165	630	.0085	1 1/8	150	456	.009
3/16	180	915	.010	1 1/4	165	504	.010	1 1/8	135	342	.010
1	180	687	.011	1 1/8	150	381	.012	1 3/4	135	294	.010
1 1/4	180	549	.012	1 3/4	150	327	.012	2	120	228	.011
1 1/8	150	254	.014	2	135	258	.014	2 1/4	120	204	.011
1 3/4	150	218	.014	2 1/4	135	228	.014	2 1/8	120	183	.012
2	150	190	.015	2 1/8	135	204	.014	3	120	153	.012
2 1/4	150	170	.015	3	135	171	.014	3 1/8			

3/16 Inch Chip				1/4 Inch Chip				3/8 Inch Chip			
Dia. of Stock	Feet Surface Speed	Rev. per Min.	Feed per Rev.	Dia. of Stock	Feet Surface Speed	Rev. per Min.	Feed per Rev.	Dia. of Stock	Feet Surface Speed	Rev. per Min.	Feed per Rev.
3/16	150	1146	.005	1/4	150	762	.005	1 1/8	135	411	.007
1/4	150	762	.006	1	150	573	.006	1 1/8	135	342	.008
1	150	573	.007	1 1/4	135	411	.007	1 1/4	135	294	.008
1 1/4	135	411	.008	1 1/8	135	342	.008	2	120	228	.009
1 1/8	135	342	.009	1 3/4	135	294	.008	2 1/4	120	204	.009
1 3/4	135	294	.009	2	120	228	.009	2 1/8	120	183	.010
2	120	228	.010	2 1/4	120	204	.009	3	120	153	.010
2 1/4	120	204	.010	2 1/8	120	183	.010	3 1/8	120	131	.010
2 1/8	120	183	.010	3	120	153	.010	4	120	114	.010
3	120	153	.010	3 1/8	120	131	.010	4 1/8	120	102	.010

TABLE 16.—SPEEDS AND FEEDS FOR SCREW MACHINE WORK.

Digitized by Google

SPEEDS AND FEEDS FOR HOLLOW MILLS. SCREW STOCK.

1/32 Inch Chip				1/16 Inch Chip				1/8 Inch Chip			
Dia. of Stock	Feet Surface Speed	Rev. per Min.	Feed per Rev.	Dia. of Stock	Feet Surface Speed	Rev. per Min.	Feed per Rev.	Dia. of Stock	Feet Surface Speed	Rev. per Min.	Feed per Rev.
1/8	80	2445	.0026	1/4	60	916	.0045	3/8	55	560	.0052
3/16	70	1426	.0039	5/16	60	611	.0052	1/2	55	420	.0065
1/4	70	1069	.0052	3/8	60	458	.0065	5/8	55	280	.0078
5/16	70	713	.0065	1/2	55	280	.0078	1	50	191	.0091
3/8	60	458	.0078	1	55	210	.0061	1 1/4	50	152	.0091
7/16	60	305	.0091	1 1/4	55	168	.0091	1 1/2	45	114	.0091
1	60	229	.0104	1 1/2	50	127	.0104	1 3/4	45	93	.0091
1 1/4	60	183	.0104	1 3/4	50	109	.0104	2	40	76	.0104
1 1/2	50	127	.0117	2	45	86	.0117	2 1/4	40	68	.0104
1 3/4	50	109	.013	2 1/4	45	76	.0117	2 1/2	40	61	.0104
2	50	95	.013	2 1/2	45	68	.0117	3	40	51	.0104
2 1/4	50	85	.013	3	45	57	.0117	3 1/2			

3/16 Inch Chip				1/4 Inch Chip				3/8 Inch Chip			
Dia. of Stock	Feet Surface Speed	Rev. per Min.	Feed per Rev.	Dia. of Stock	Feet Surface Speed	Rev. per Min.	Feed per Rev.	Dia. of Stock	Feet Surface Speed	Rev. per Min.	Feed per Rev.
1/2	55	420	.0052	3/4	50	254	.0052	1 1/4	45	137	.0065
5/8	55	280	.0065	1	50	191	.0065	1 1/2	45	114	.0065
1	55	210	.0065	1 1/4	45	137	.0065	1 3/4	45	98	.0065
1 1/4	50	152	.0078	1 1/2	45	114	.0078	2	40	76	.0078
1 1/2	50	127	.0078	1 3/4	45	93	.0078	2 1/4	40	68	.0078
1 3/4	50	109	.0078	2	40	76	.0078	2 1/2	40	61	.0078
2	40	76	.0091	2 1/4	40	68	.0091	3	40	51	.0078
2 1/4	40	68	.0091	2 1/2	40	61	.0091				
2 1/2	40	61	.0091	3	40	51	.0091				
3	40	51	.0091								

TABLE 17.—SPEEDS AND FEEDS FOR SCREW MACHINE WORK.

Digitized by Google

of feed are provided for than with the box tool. With both classes of tools the feeds are, of course, increased as the diameter of the stock increases, the peripheral speeds being reduced as the feeds grow coarser and the chip greater in depth.

The speeds and feeds for finishing box tools as used on different materials are given in Table 18, the last column indicating the amount of stock which, generally speaking, it is advisable to remove in order to produce a good surface.

CUTTING SPEEDS AND FEEDS FOR FINISH BOX TOOL

Finished Diameter of Work	Screw Stock			Brass Rod			Cast Iron			Tool Steel			Amount advisable to remove on a Side
	Feet Surface Speed	Rev. per Min.	Feed per Rev.	Feet Surface Speed	Rev. per Min.	Feed per Rev.	Feet Surface Speed	Rev. per Min.	Feed per Rev.	Feet Surface Speed	Rev. per Min.	Feed per Rev.	
1/16	80	4889	.003	180	11000	.003				40	2445	.002	.002
1/8	80	2445	.0045	180	5500	.0045				40	1222	.003	.0025
3/16	70	1426	.0055	180	3668	.0055	70	1426	.0055	40	815	.003	.0025
1/4	65	993	.0075	180	2750	.0075	70	1069	.0075	35	581	.004	.0045
3/8	60	458	.011	180	1375	.011	65	496	.011	35	267	.005	.006
3/4	60	305	.012	180	917	.012	65	331	.012	35	178	.007	.006
1	60	229	.012	175	668	.012	60	229	.014	30	115	.009	.0065
1½	55	140	.014	170	433	.014	60	153	.016	30	76	.009	.007
2	50	95	.014	170	325	.014	60	115	.016	30	57	.009	.008

TABLE 18.—SPEEDS AND FEEDS FOR SCREW MACHINE WORK.

FORMING-TOOL SPEEDS AND FEEDS

Speeds and feeds for forming tools are given in Table 19, the widths covered here ranging from $^1/_{16}$ inch to 2 inches, and the smallest diameter of form from 1½ inches down to $^1/_{16}$ inch. It will be seen that the tool about ¼ inch wide is adapted to take the coarsest feed, tools from this width up to $^3/_{16}$ (such as are commonly employed for cutting-off purposes) admitting of heavier crowding, as a rule, than either the narrower or wider tools. Thus we see the rate of feed drop off as a tool narrows to $^1/_{16}$ inch, which obviously is too thin a cutting device to admit of taking much of a chip, while similarly as the width of form and chip increases above about $^3/_{16}$ or ¼ inch the rate of feed must again be diminished to give the best results. Naturally, other things being equal, the greater the diameter of the section formed, the coarser the feed which can be taken economically. This is also indicated by the figures in the table.

Digitized by Google

DRILLING AND REAMING DATA

Drilling speeds and feeds are given in Table 20. While these speeds are based on much higher peripheral velocities than drillmakers as a rule

SPEEDS FOR FORMING								
Dia. of Work	Screw Stock		Brass Rod		Cast Iron		Tool Steel	
	Feet Surface Speed	Rev. per Min.	Feet Surface Speed	Rev. per Min.	Feet Surface Speed	Rev. per Min.	Feet Surface Speed	Rev. per Min.
1/8	75	2292	200	6112				
3/16	75	1528	200	4074				
1/4	70	1069	185	2827	75	1146	45	688
3/8	65	662	185	1885	70	713	40	407
1/2	65	497	185	1414	70	535	40	306
3/4	60	305	175	882	65	331	35	178
1	60	229	175	667	65	248	35	134
1 1/2	60	153	170	432	60	153	30	76
2	50	96	170	324	60	115	30	57

FEEDS FOR FORMING TOOLS								
With of Form	Smallest Diameter of Form.							
	1/16	1/8	3/16	1/4	3/4	1/2	3/4	1 1/2
1/16	.0007	.0008	.001	.0012	.0012	.0012	.0012	.0012
1/8	.0005	.0008	.001	.0012	.0015	.0020	.0025	.0025
1/4		.0007	.001	.001	.0015	.0015	.0018	.0018
3/8			.0009	.001	.001	.0012	.0015	.0015
1/2			.0008	.0009	.001	.001	.0015	.0015
3/4				.0008	.0009	.001	.0011	.0012
1					.0008	.0009	.001	.0012
1 1/2					.0007	.0007	.0009	.0011
2							.0007	.001

TABLE 19.—SPEEDS AND FEEDS FOR SCREW MACHINE WORK.

recommend for general purposes, it should be remembered that conditions for drilling in the automatic on the usual run of work are nearly ideal so far as lubrication of drill and work, steadiness of feed, etc., are

Digitized by Google

DRILLING FEEDS AND SPEEDS

Screw Stock			Brass Rod		Cast-Iron		Tool Steel		Screw Stock			Brass Rod		Cast-Iron		Tool Steel	
Dia. of Drill	Feed per Rev.	R.P.M. at 60 Ft. Peripheral Speed	Feed per Rev.	R.P.M. at 175 Ft. Peripheral Speed	Feed per Rev.	R.P.M. at 60 Ft. Peripheral Speed	Feed per Rev.	R.P.M. at 35 Ft. Peripheral Speed	Dia. of Drill	Feed per Rev.	R.P.M. at 55 Ft. Peripheral Speed	Feed per Rev.	R.P.M. at 165 Ft. Peripheral Speed	Feed per Rev.	R.P.M. at 55 Ft. Peripheral Speed	Feed per Rev.	R.P.M. at 33 Ft. Peripheral Speed
1/32	.0006	7333	.0008	21390	.0006	7333	.0005	4278	1/2	.005	420	.0065	1260	.005	420	.0037	252
3/64	.0008	4889	.0010	14260	.0008	4889	.0006	2852	9/16	.0057	373	.0074	1120	.0057	373	.0043	224
.059	.001	3884	.0013	11329	.001	3884	.0008	2265	19/32	.0057	353	.0074	1067	.0057	353	.0043	212
1/16	.0013	3667	.0017	10696	.0013	3667	.0010	2139	5/8	.0059	336	.0077	1008	.0059	336	.0044	202
5/64	.0016	2093	.002	8555	.0016	2093	.0012	1658	11/16	.006	305	.0078	917	.006	305	.0045	183
3/32	.0018	2445	.0023	7130	.0018	2445	.0014	1430	3/4	.0065	280	.0084	840	.0065	280	.0049	169
.105	.002	2186	.0026	6366	.002	2186	.0015	1305	13/16	.007	258	.0091	776	.007	258	.0052	155
1/8	.0025	1833	.0033	5348	.0025	1833	.0018	1070	7/8	.0075	240	.0097	702	.0075	240	.0056	144
.150	.003	1528	.0039	4456	.003	1528	.0022	891	15/16	.008	224	.0104	672	.008	224	.006	134
5/32	.003	1421	.0039	4144	.003	1421	.0022	828			50 Ft.		150 Ft.		50 Ft.		30 Ft.
3/16	.004	1222	.0052	3565	.004	1222	.003	713	1	.0085	191	.0110	573	.0085	191	.0064	115
7/32	.004	1048	.0052	3050	.004	1048	.003	611	1 1/8	.009	169	.0117	509	.009	169	.0067	102
1/4	.0045	916	.0058	2674	.0045	916	.0033	535	1 1/4	.0095	152	.0123	458	.0095	152	.0071	92
9/32	.0045	815	.0058	2377	.0045	815	.0033	475	1 3/8	.010	139	.0130	416	.010	139	.0075	83
5/16	.0045	733	.0058	2139	.0045	733	.0033	427	1 1/2	.011	127	.0143	382	.011	127	.0082	76
3/8	.0045	611	.0061	1783	.0045	611	.0035	356	1 5/8	.012	118	.0156	352	.012	118	.009	70
7/16	.005	524	.0065	1528	.005	524	.0037	305	1 3/4	.013	109	.0169	327	.013	109	.0097	65
									2	.014	96	.0182	294	.014	96	.0105	57

TABLE 20.—SPEEDS AND FEEDS FOR SCREW MACHINE WORK.

Digitized by Google

concerned, and it is possible under these conditions where the holes drilled as a rule are comparatively shallow and the drill has ample opportunity for cooling during the operations carried on by the other

REAMING FEEDS AND SPEEDS

Dia. of Reamer	Feed per Rev.	Amount to Remove on Dia.	Rev. per Min.				Dia. of Reamer	Feed per Rev.	Amount to Remove on Dia.	Rev. per Min.			
			Screw Stock at 40 Ft.	Brass Rod at 130 Ft.	Cast Iron at 45 Ft.	Tool Steel at 25 Ft.				Screw Stock at 40 Ft.	Brass Rod at 130 Ft.	Cast Iron at 45 Ft.	Tool Steel at 25 Ft.
⅛	.005	.0045	1222	3972	1375	764	1¼	.018	.010	122	397	138	76
3/16	.006	.0045	815	2648	917	509	1⅜	.020	.010	102	331	115	63
¼	.007	.006	611	1986	688	382	1½	.022	.010	87	284	98	54
⅜	.0085	.006	407	1324	458	254	2	.024	.013	76	248	86	48
½	.0105	.008	306	993	344	191	2¼	.026	.013	68	220	76	42
⅝	.012	.008	245	795	275	153	2½	.028	.013	61	199	69	38
¾	.014	.008	204	662	229	127	2¾	.030	.013	56	181	63	35
1	.016	.010	153	497	172	95	3	.032	.013	51	165	57	32

TABLE 21.—SPEEDS AND FEEDS FOR SCREW MACHINE WORK.

SPEEDS FOR DIES - STANDARD THREADS.

Dia. of Thread	Screw Stock		Brass Rod		Cast Iron		Tool Steel		Cast Brass	
	Feet Surface Speed	Rev. per Min.	Feet Surface Speed	Rev. per Min.	Feet Surface Speed	Rev. per Min.	Feet Surface Speed	Rev. per Min.	Feet Surface Speed	Rev. per Min.
⅛	40	1222	135	4126	40	1222	25	764	120	3666
¼	40	611	125	1909	40	611	25	382	110	1680
⅜	35	356	120	1222	35	356	20	204	100	1019
½	35	267	120	917	35	267	20	153	100	764
¾	35	178	115	586	30	153	20	102	100	509
1	30	115	110	420	30	115	20	76	90	344
1¼	30	92	100	306	25	76	15	46	90	275
1½	30	76	90	229	25	64	15	38	90	229
2	25	48	85	162	20	38	15	29	90	172

TABLE 22.—SPEEDS AND FEEDS FOR SCREW MACHINE WORK—HIGH SPEED DIES.

tools, to maintain speeds that would be considered too high to be attempted in general shop practice.

Table 21 is made up of speed and feed data for reamers. In this table the feed for different classes of material has been considered as constant

Digitized by Google

for any given diameter of reamer, although it is conceivable that with certain materials, especially on brass alloys, etc., the feed per revolution might be increased somewhat, to advantage, over the rates given. These feeds have been tabulated, however, as representing highly satisfactory practice in reaming the materials listed.

THREADING, COUNTERBORING, ETC.

Table 22 explains itself and, while giving speeds for threading work with dies, should be of equal value in establishing speeds for tapping. It should be noted that the speeds in this table are proper for *high speed* dies. For *carbon steel* dies the speeds used should be from 50 to 75 per cent of the rates given.

For feeds for counterbores from ⅜ inch to 2 inches diameter, Tables 15 and 16 for turning may be followed where the counterbores cut to a depth from one-half to three-quarters their diameter. Where cutting deeper than about one diameter, the feeds would be decreased; in such depths it is well to withdraw the counterbore during the cutting operation to free it from chips.

It is not expected that the speeds and feeds laid down in these tables will coincide exactly with the ideas of everybody engaged in screw machine operations. Conditions as to materials, lubricants, clearances of cutting edges, quality of tools, etc., all have an important bearing upon the question of efficient cutting speeds and feeds. It is believed, however, that the foregoing information should be of service to a good many readers, representing as it does the practice commonly followed by one of the largest tool shops with its carbon-steel screw machine tools.

Digitized by Google

CHAPTER X

SPRING COLLETS AND FEED CHUCKS

Spring collets and feed chucks, or feed fingers as they are frequently called, are the first tools to be considered in connection with screw machine work, as upon these appliances devolve the operations of feeding the bar of material through the spindle and the holding of it while the different machining cuts are taken by the various cross-slide and turret tools.

When manufactured in large quantities the collet blanks are produced in the turret machine by the aid of forming tools for machining the exterior surface and by suitable internal tools of the drill and reamer order for finishing the interior to the required dimensions. In making a few collets at a time, however, as is generally the practice in the smaller shops, a few simple appliances suffice for the satisfactory handling of the work during the different operations.

LATHE OPERATIONS

The collet blank may first be roughed out in the lathe and the inside chucked out and reamed taper from the rear end to leave the walls of the collet body of suitable proportions and to allow the collet to be slipped onto a taper arbor, the rear end of which is fitted to the taper hole in the lathe spindle. While mounted on this arbor the outer end of the collet is centered and center reamed to allow it to be supported by the tail center, and the body may then be turned and bored to correct shape and size without removing from the arbor. It is sometimes advantageous to rough out two collets on the same piece of stock and then cut apart and mount on the taper plug arbor for finishing separately. This method gives a longer and handier piece of material to work in the lathe.

The work is readily removed from the taper arbor on which it is turned, by means of a nut on a threaded portion of the arbor body adjacent to the taper section. Before taking the chuck blank off from its arbor the conical nose should be gaged carefully to make sure that it will fit properly in its seat in the screw machine spindle. The hole, bored in the front end for the bar material, should be true and straight—especially if grinding is not to be resorted to after hardening. Of course

Digitized by Google

where absolute truth is essential in the running of the collet it is important that the hole be ground after hardening with the collet seated in a grinder fixture in precisely the same way as it will later be operated in the screw machine.

HOLDING WHILE SLITTING

The taper arbor referred to is of the general form indicated in Fig. 80, which shows the method also of carrying the work between the dividing head and tail center in the milling machine, while the slots are being cut to allow the collet to open and close on the material when in service. There are numerous methods of mounting collets for this slitting operation, but the one indicated is as simple as any and entirely satisfactory where collets are put through in small lots and more elaborate fixtures are therefore uncalled for. If a small piece of flat stock is centered as shown and introduced between the end of the work and the foot center of the dividing head, and the center itself flatted on top, sufficient clearance will be obtained for the slitting saw which is run into the work from the front end.

COLLET INTERIOR

It is well to shape the interior of the collet about as illustrated in Fig. 81, the long curve or fillet *b* at the front end of the chamber where it joins the cylindrical hole, forming in conjunction with the fillet at *a* a strong section not likely to break away in the operation of the collet. The internal sloping surface at *b* also facilitates the passing of a fresh bar of stock into the collet upon the finishing up of the previous length of material.

PREPARING FOR HARDENING

Before hardening collets it is common practice to open them somewhat to insure their having a given tension after hardening and tempering so that they will open and release the stock the instant they are themselves freed by the cam-operated chucking mechanism. This opening of the collet must be carefully attended to or an eccentric and unsatisfactory job will be the result. Sometimes a simple fixture having a cone-pointed spindle is used for this purpose, the collet or chuck being held centrally while the cone plunger is forced between the chuck jaws sufficiently to open them evenly the necessary amount. However, no matter how much care is taken in this operation, the effect is lost unless the hardening is properly attended to, and the only sure way of producing a perfectly true collet with certainty is to grind it as a final operation.

Digitized by Google

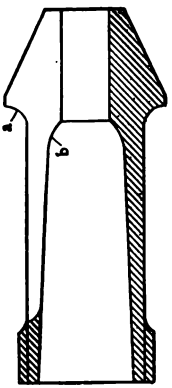

FIG. 81

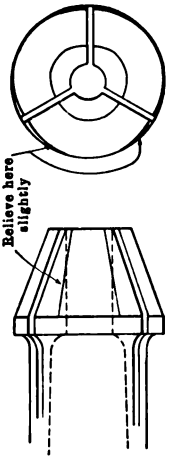

FIG. 84

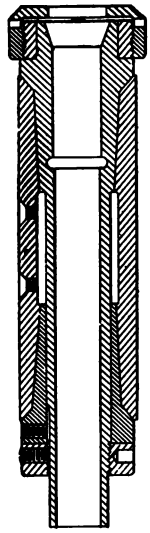

FIG. 86

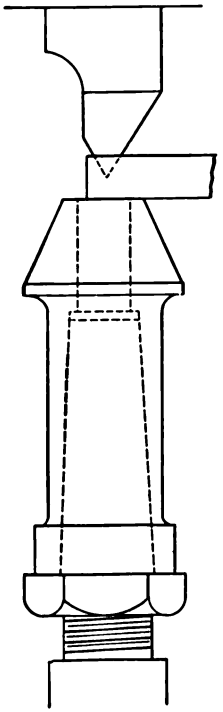

FIG. 80

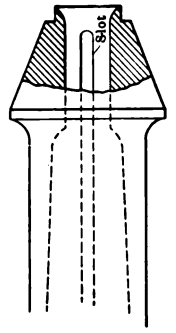

FIG. 83

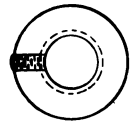

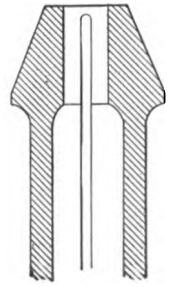

FIG. 82

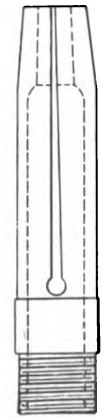

FIG. 85

FIGS. 80–86.—Spring collets and feed chucks.

Digitized by Google

PREVENTING DISTORTION

Some toolmakers take the precaution of leaving a thin fin of metal at the front end of the collet in each saw slot, as in Fig. 82, in order that when hardened there shall be no chance of distortion due to unequal springing of the prongs or jaws. This metal tie or bridge at the ends of the jaws is readily removed by grinding out with a thin slitting wheel or lap. Still another scheme is illustrated in Fig. 83, which comprises in addition to the thin wall of metal at the front ends of the saw slots, a narrow ring or nose adapted to be carried on a grinder center while the collet is ground externally. Thus inequalities introduced in the hardening process may be rectified by grinding and afterward the superfluous metal at the end of the collet nose may be ground off, leaving the appliance ready for service.

Another method of preventing trouble in hardening collets is to insert a piece of sheet metal (say $^1/_{32}$ inch thicker than the slot width) in the front ends of the slots and then wire the nose of the chuck tightly so as to retain the steel pieces during the hardening operation. The collet must be heated uniformly, and dipped so as to insure all three prongs being cooled simultaneously, otherwise they will be of different lengths and twisted, resulting in an untrue collet. With the best of care, a collet that is hardened, but not ground afterward, will generally require touching up on the conical portion of one or two of the prongs to insure its running true. It is not a difficult undertaking, however, to make a chuck run true within 0.002 inch by polishing one or two prongs.

In order that the collet may close parallel, it must be fairly long, and the exterior of each prong, or jaw, may be relieved by filing, as in Fig. 84, so as to insure its bearing along the center. After hardening, the collet should be carefully tempered at the ends of the slots to prevent breaking at this point.

FEED CHUCKS

The feed chucks or feed fingers need no such refinements in their production. They are usually closed after slitting on opposite sides, and thus after hardening they will maintain a constant grip upon the stock sufficient to feed the bar forward the moment it is released by the chuck. The idea is indicated in Fig. 85, which represents a typical feed chuck. Ordinarily the hole for the stock should be bored out a little over size, otherwise the corners of the feed chuck jaws when drawn back over the stock will mar the surface.

Digitized by Google

A GRINDING FIXTURE FOR CHUCKS

A handy grinding appliance for spring collets is shown in Fig. 86, this sketch being made from a device in use at the E. Howard Watch factory, Waltham, Mass. This particular tool is adapted to receive an automatic screw machine collet after it is hardened, and hold it during the grinding operation in precisely the same manner in which it will later be held in the screw machine when in operation. The quill in which the spindle is carried is slipped into a regular quill rest on the bench lathe or grinder, and the collet to be ground out is readily inserted and as easily removed when the grinding or lapping operation is completed.

All parts of this fixture, including quill, spindle, rear bearing, cone, cap, and adjusting nut, are of steel, hardened, ground and lapped.

Digitized by Google

CHAPTER XI

BOX TOOLS AND OTHER EXTERNAL CUTTING APPLIANCES

The accompanying engravings, Figs. 87 to 106, illustrate a variety of so termed box tools and hollow mills which are used in automatic screw machines, and in much the same form in hand machines also. It is the purpose of this chapter to point out some of the reasons for different designs and to show for what particular cases each type of tool illustrated is best adapted.

GENERAL PRINCIPLES

Practically all box tools consist primarily of a frame or body which is clamped to the turret of the screw machine. The box-tool frame is

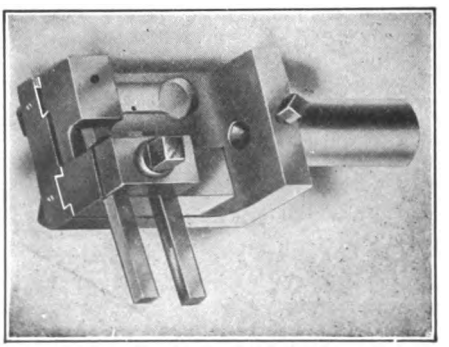

FIG. 87.—Non-adjustable roughing box tool.

utilized for holding the cutting tools and, usually, a work-supporting device commonly known as a back rest. In the frame there is also in some instances provision made for holding internal cutting tools such as drills, counterbores, etc.; it this latter case outside turning and boring may be accomplished simultaneously. The cutting tools are usually adjustable so as to be suitable for turning various diameters; the back rests or work-supporting devices are made both adjustable and solid or non-adjustable. Both cutting tools and back rests are preferably mounted in sub-holders permitting of longitudinal adjustment. The most com-

Digitized by Google

mon turning tools in use are for cylindrical work, but taper work can also be successfully produced by box tools designed for the purpose.

CONDITIONS OF SERVICE

The type of box tool in general, as well as such features as the work-supporting device and the manner in which the cutting-tool edge is presented to the work, are dependent upon various conditions, among which may be mentioned:

1. Length of work being turned;
2. Uniformity of diameter of stock used (bright drawn or rough stock);
3. Cross-section of stock (circular or otherwise);
4. Character of material;
5. Reduction in diameter to be made;
6. Character of longitudinal cut (cylindrical, taper, or other).

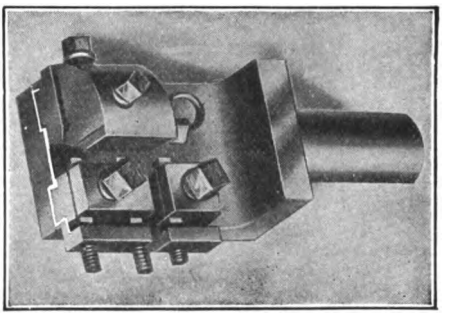

FIG. 88.—Adjustable finishing box tool.

Before explaining the reasons why the foregoing conditions should influence the design of tool, it may be well to understand precisely by name the various parts which are frequently referred to later on. To this end a few of the different types of box tools and component parts, as shown by Figs. 87 to 94, will first be briefly described.

TYPES OF BOX TOOLS

Figs. 87 and 88 illustrate a box tool with movable blocks holding the cutters and with a back rest of the non-adjustable open type. The cutting edge of the tool is practically radial, but longitudinally the cutter lies tangent to the circle representing the work. This tool is commonly called a roughing box and is recommended for heavy cuts as there is less danger of springing, due to the strain on the tool in cutting, than in the case of the radial tool in Figs. 89 and 90. The latter tool has movable

Digitized by Google

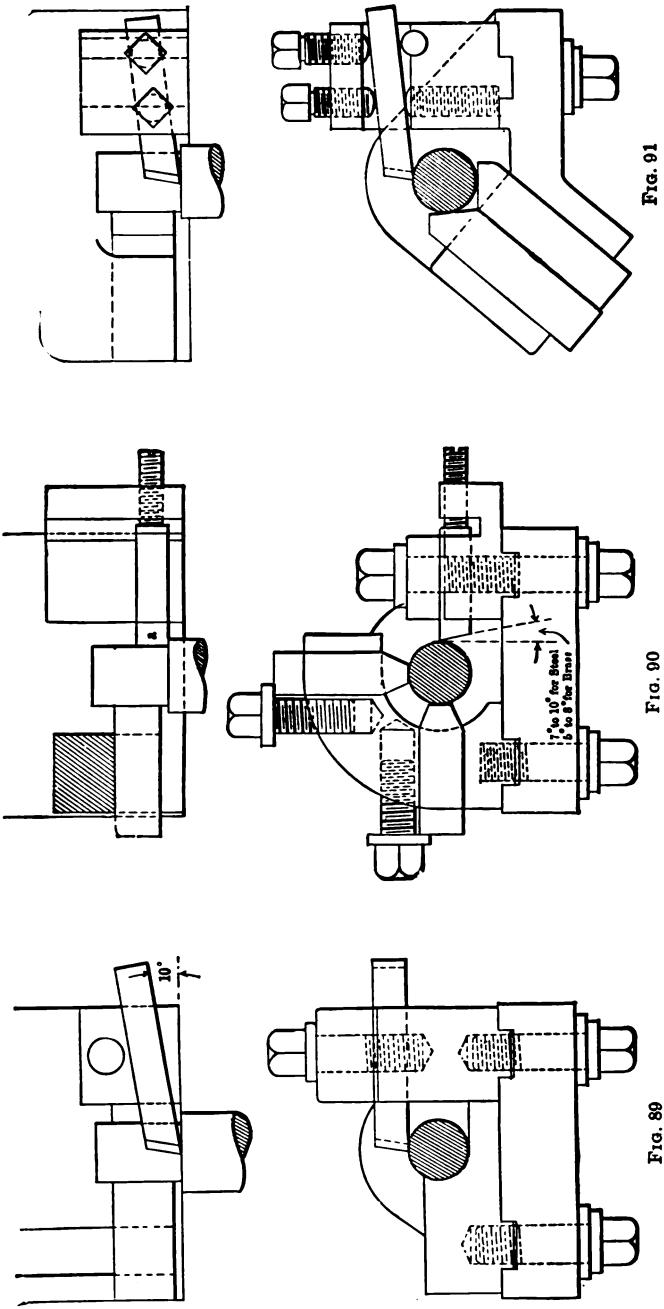

Fig. 89 Fig. 90 Fig. 91

Figs. 89–91.—Box-tool rests and cutters.

Digitized by Google

blocks holding the cutters, and movable blocks carrying the back-rest jaws. Both cutters and back-rest jaws may be adjusted to suit different diameters of work. The cutting edge of the cutter is radial to the work and is parallel with the longitudinal section of the cutter. The tool is used mostly for brass and similar material and for light cuts on steel, and is in this general form commonly known as a finishing box. On very free-cutting materials such as brass, the edge of the cutting tool is generally presented to the work without any rake, as shown in Fig. 90. In cutting the harder materials, steel, etc., and especially in taking roughing cuts on such material, rake is desirable; hence the tool of the roughing box is presented to the work in the manner shown by Fig. 88.

The tangent cutter used in the box tool shown in this view and in Fig. 87 is sharpened by grinding on the end, and compensation for the grinding away of the metal is made by adjusting the cutter forward, whereas in the radial type of cutter in Figs. 89 and 90, frequent sharpening cannot be done without resulting in lowering the cutting edge of the tool below the center of the work, unless a substantial part of the tool be sacrificed. The radial tool, however, is easily ground accurately on face *a*, which is the particular edge governing the finish; while the corresponding face on the tangent type of tool is rather difficult to grind so as to produce as smooth work.

OTHER FORMS OF BOX TOOLS

Fig. 91 outlines the general scheme of a box tool with tangent cutter having means of radial adjustment for various diameters, the back rests being adjustable also, as indicated.

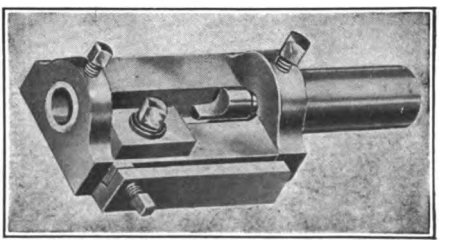

FIG. 92.—Bushing box tool.

In Fig. 92 we have a box tool with a back rest of the bushing type which fully envelops the work. A bushing like that shown in Fig. 93 is frequently used in the bushing type of box tool. The bushing is tapered externally and drawn into a conical hole, and is thus suitable for slight variations in stock sizes. Fig. 94 shows another "solid" rest, but without a bushing. The question of chip room frequently makes it

Digitized by Google

necessary to abandon the bushing and bore the hole for the stock directly in the back rest. Quite often the back rest is cut away to allow the tools to operate on a second shoulder cut; then the bushing as ordinarily made interferes. As a rule, it is preferable to use the bushing where possible, owing to the ease with which it may be replaced when worn out of shape, and also because of the facility with which any changes due to hardening may be corrected.

Other types of work-supporting devices, such as internal stem rests, etc., are very commonly used. Fig. 95 illustrates such a combination. Frequently, too, revolving stem rests are used in place of the stationary

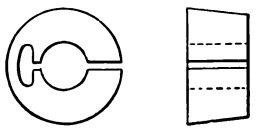

FIG. 93. Bushing

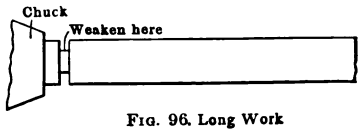

FIG. 96. Long Work

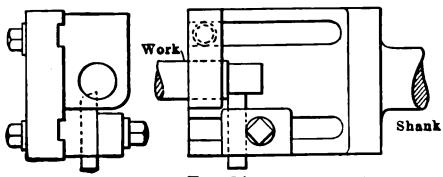

FIG. 94

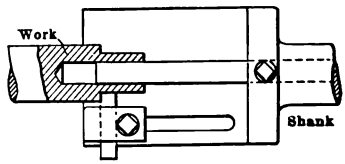

FIG. 95

FIGS. 93–96.—Other turning methods.

type shown. Quite often a drill or counterbore is held in the shank of the box tool in a similar manner and acts as a support, and also, as before stated, enables turning and boring operations to be accomplished simultaneously.

SELECTION OF BACK RESTS

Generally speaking, work that projects over one and one-half times its diameter from the spindle chuck cannot be turned accurately or rapidly without the aid of a support which will prevent the work springing away from its proper radial relation to the edge of the cutting tool.

Usually on work which does not project over five diameters from the chuck, the back rest is located so as to support the work by the diameter produced by the first cutting tool in the box tool, the back rest being set from about $^1/_{64}$ inch to $^1/_{32}$ inch back of the cutting tool, as in Figs. 88 and 90. While any of the types of back rests shown in Figs. 87 to 94 may be used, on work of the length mentioned an enveloping back rest is not required. The type of back rest used in the tool in Figs. 89 and 90

Digitized by Google

is adjustable for wear and preferable on this account. The non-adjustable open back-rests, Figs. 87 and 88, is recommended only when the design of the tool makes it difficult to utilize an adjustable type. All back rests should be of tool steel. They should be very hard and smooth; otherwise when used on fast-running material such as brass, a welding action takes place. They should be ground and lapped on the bearing face so as to bear more strongly on the forward end of the work than at the rear. The clearance need not be more than 0.003 or 0.004 inch to the foot. Should the back rest be bell mouth, the work turned will be rough and covered with ridges.

TOOL POSITION, LUBRICATION, ETC.

Also it is quite important, where using such rests, that the work be not turned too large if roughing up of the surface is to be avoided. About 0.0005 inch freedom should be allowed for work up to ½-inch diameter, and about 0.001 inch freedom for 1-inch diameter. Proper lubrication of the bearing is also essential in preventing roughing up of the work. Lack of alignment of solid or half-open rests with the spindle of the machine may also cause the production of poor surfaces on the work, owing to the heavy crowding action under such conditions.

In setting adjustable back-rest jaws it will be found conducive to good work to hold a bar in the head spindle, turn a true running piece of work from 0.0004 inch to 0.0008 inch oversize and then adjust the jaws so that they will bear snugly on the turned part. The closer this is to the spindle the better. In using solid or non-adjustable open-back rests, as shown by Figs. 87, 88, 92, and 94, it is recommended that they be bored out while held in the turret hole of the machine that they are to be used in. This insures the hole being in alignment with the head spindle; these conditions, as well as having the turret slide travel parallel with the axis of the head spindle, are necessary in order to produce accurate work.

Burnishing of stock generally results from the pressure of the cutting tool forcing the work against a closely adjusted, smooth back rest, and is usually considered an evidence of proper adjustment. Frequently, however, this is found not to be the case.

LONG AND SHORT WORK

On very long work, when bright-drawn cylindrical stock of uniform diameter is being turned, the solid back rest is found very satisfactory. The rest is in this event set ahead of the cutting tool and fully enveloping the work. It obviously prevents any tendency for the work to spring

Digitized by Google

away. When heavy stock which does not run true is to be machined, it is necessary before turning partly to cut off, as shown by Fig. 96, thus permitting the back rest to pull the bar into central position. In case there are short bends in the bar, trouble will be met, so that for long work machined in this manner it is necessary to select straight bars. It is also important where a back rest is used ahead of the cutting tool (that is, where the unmachined bar rotates directly in the back rest) to select practically uniform diameters of stock, not varying in size over 0.0004 inch to 0.0008 inch. In many large screw factories all bright-drawn stock is carefully gaged as soon as received and sorted out in this manner; in setting up the machine a back rest is selected to suit a particular bundle of gaged stock.

IRREGULARITY OF STOCK SECTION

Where bright-drawn stock is used which is slightly out of round, as is very frequently the case, the use of a full enveloping back rest preceding the cutting tool will be found superior to the jaw type, giving a two-point bearing. In the former case the pressure of the tool cannot force the work away and the turned part will be cylindrical; whereas with the jaw type of back rest the pressure of the cut will keep the irregular contour of the bar against a jaw and consequently reproduce a similar cross-section to the turned part. This emphazises the value of using back-rest jaws so as to follow the cutting tool; but as before noted, their use is limited to short work and work of medium length. In such work, if the back-rest jaws are properly set and the turret slide travels parallel with the axis of the head spindle, true work will result irrespective of the collet or turret hole being out of line with the spindle.

CAST-IRON WORK

In machining cast iron, as on the magazine automatic, box tools with the ordinary types of rests are not satisfactory, owing to the fact that the cast-iron dust is apt to become ground between the rest jaws and the turned part of the work, thus causing the latter to become roughed up. The use of water, however (with just enough oil to prevent rusting), or any thin solution under pump pressure, effectually overcomes this trouble; oil seems to increase the difficulty.

A box tool with roller back rests, which is excellent on cast-iron work when used in conjunction with an air blast to keep dust from accumulating between the rollers and work surface, is shown in Fig. 97. This box tool is sometimes used on the Pratt & Whitney magazine machine, may be stiffly supported at the bottom by a hardened-steel plate carried

Digitized by Google

on a bracket attached to the front end of the turret slide and traveling with the slide. Another satisfactory way of turning cast iron is by means of hollow mills.

HOLLOW MILLS

Hollow mills are also very suitable for turning long work from bar stock. These tools with multiple teeth support the work centrally, cut

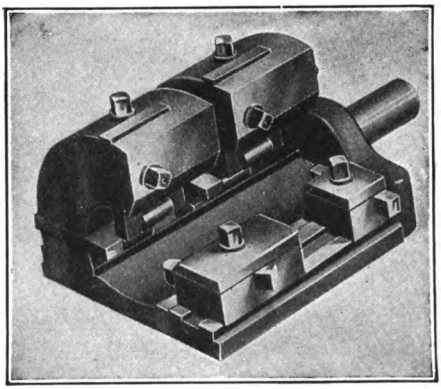

FIG. 97.—Box tool with roller rest.

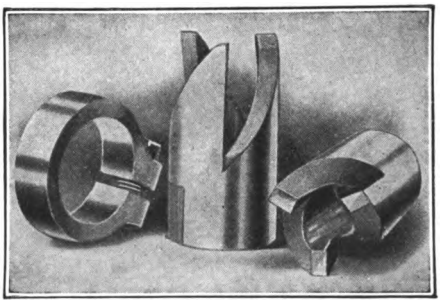

FIG. 98.—Hollow mills and clamp collar.

very rapidly, and if held concentric with the head spindle and properly cleared will produce excellent results.

Fig. 98 illustrates a form of hollow mill. The clamp collar shown in the group is commonly used for slightly adjusting the teeth to cut to correct diameter. Another good form of clamp ring is shown in Fig. 99. This is made with sufficient metal at one side to admit of clamping screw, while the opposite side of the ring is weak enough to allow it to close properly upon the mill when adjusted by the screw.

Digitized by Google

The teeth of hollow mills should be radial or ahead of the center. With the cutting edge ahead of the center, as in Fig. 100, the chips as produced are caused to move outward away from the work and prevented from disfiguring it. With the cutting edge below the center, rough turning will result. With the cutting edge greatly above the center, chattering is produced. About one-tenth of the cutting diameter is found a good average amount to cut the teeth ahead of the center. When the chips produced from any turning or boring cut curl nicely, it is indica-

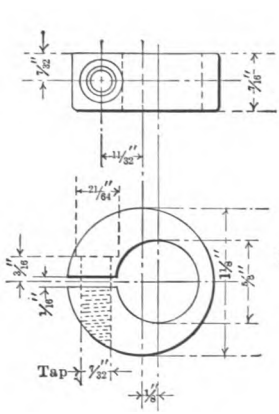

FIG. 99

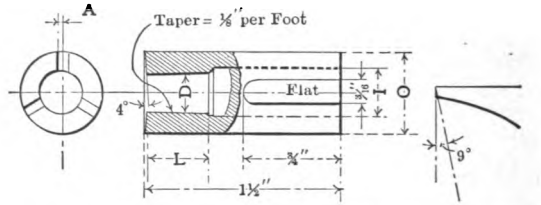

D= Finishing	1/16	3/32	1/8	5/32	3/16	7/32	1/4	9/32	5/16	3/8	1/2	5/8	3/4
D= Roughing	.072	.104	.135	.166	.197	.229	.26	.291	.322	.385	.510	.635	.760
L =	1/4	1/4	5/16	5/16	3/8	3/8	7/16	7/16	1/2	5/8	3/4	7/8	1
A = D/10 =	.006	.009	.012	.015	.019	.022	.025	.028	.031	.038	.050	.063	.075
I =	3/16	3/16	3/16	5/16	5/16	3/8	3/8	3/8	3/8	7/16	9/16	11/16	13/16
O =	3/8	3/8	3/8	3/8	3/8	3/8	3/8	3/8	3/8	1	1¼	1⅜	1⅝

FIG. 100

FIGS. 99–100.—Clamp-collar and hollow-mill dimensions.

tive of a free cutting action; but these chips are very troublesome on the automatic screw machine. In making hollow mills for the automatic, part or all of the rake to the cutting edge is generally sacrificed.

HOLLOW-MILL PROPORTIONS

The table under the hollow-mill sketch in Fig. 100 gives proportions of mills from 1/16 to ¾ diameter, showing the amount to cut the teeth ahead of the center, the amount of taper in the hole, etc.

Besides the type of mill shown made in one piece, hollow mills are often used with inserted blades of high-speed steel. These tools are especially useful on the larger sizes of work.

TAPER-TURNING TOOL

So far we have discussed conditions where cuts are cylindrical and where box tools with stationary cutting tools and back rests are suitable. On taper work the cutting tool must move radially; the back rest, unless

Digitized by Google

it precedes the cut, must be so constructed as to adjust itself to the increase or decrease in diameter.

Fig. 101 illustrates a type of box tool for taper work which is suitable when uniform bright-drawn stock is used. The back rest consists of a stationary bushing fully enveloping the bar. The hole should be about 0.0005 oversize and nicely lapped. The cutting tool is held in a transverse sliding member, the cross movement to the slide being controlled by a taper bar mounted on the cross slide of the screw machine. The

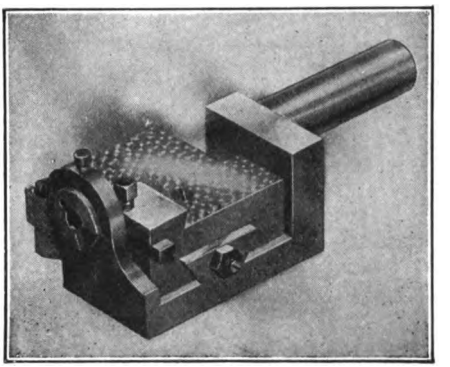

FIG. 101.—Taper-turning box tool.

taper bar is sometimes made in two pieces which may be adjusted in such a manner as to permit varying angles of tapers to be produced. This tool allows only one cut to be taken over the work unless the support from the back rest is dispensed with.

SOME POINTS IN BACK-REST CONSTRUCTION

Having now illustrated various types of box tools and their rests, hollow mills, etc., a few words relative to the actual making of certain box-tool parts may be of interest.

In making back rests of the quarter-bearing type, as shown by Figs. 87 and 88, the usual custom is first to bore out the solid block from 0.0005 to 0.001 inch over the size that is to be turned, and plane away the portion indicated at *A*, Fig. 102. The hole should be very smooth and cylindrical. Low-carbon tool steel is very good for the purpose, providing the work is pack hardened; otherwise it is preferable to use high-carbon steel and harden in an open fire.

After the back rest has been hardened and assembled in the box-tool frame, the bearing may be slightly lapped with emery by holding a cylindrical piece of brass of correct diameter in the screw machine chuck.

Digitized by Google

The turret slide being moved back and forth will very quickly cause the lap to correct any slight crookedness due to the hardening.

When an exceptionally nice job is required, the back rest may be hardened after cutting in, as at *B*, Fig. 102; afterward, by using a slitting emery wheel the corner may be removed entirely, leaving a little over the quarter bearing.

It is found good practice to give back rests a width equal to one or

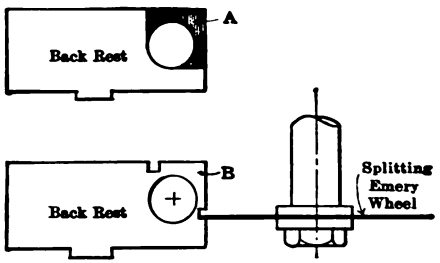

FIG. 102.—Cutting out corner of back rest

one and one-half times the diameter of the work they are used on. It often happens, of course, that the positions of the cutting tools necessitate the employment of two rests in one box tool.

BOX-TOOL CUTTERS

It may be stated that present-day practice favors the use of high-carbon steel for the radial type of tools and high-speed steel for tangent cutters on heavy roughing cuts.

Sections recommended for box-tool cutters are as follows: For box tools used for stock diameters up to $^5/_{16}$ inch, $^3/_{16}$ inch square; up to $\frac{3}{8}$ inch diameter, $^7/_{32}$ inch square; up to $\frac{1}{2}$ inch diameter, $\frac{1}{4}$ inch square; up to $\frac{3}{4}$ inch diameter, $^5/_{16}$ inch square; up to 1 inch diameter, $\frac{3}{8}$ inch square; up to $1\frac{1}{2}$ inches diameter, $\frac{1}{2}$ inch square.

THE "TANGENT" CUTTER

While the box tool shown in Figs. 87 and 88 has been called the tangent tool, actually the cutter should not be exactly tangent to the diameter to be turned, as it is then impossible to adjust this type of cutting tool so as to cut under size, although by withdrawing the tool oversize work can be turned. In order to be able to compensate for slight errors and to insure that work may be turned to fit the non-adjustable back rest, it is the practice to plane the cutter block so that the cutting edge of the tool is about 0.002 inch to 0.003 inch below a line tangent to the diameter actually to be turned, as at *C*, Fig. 103.

Digitized by Google

The effect of in-and-out adjustment of the cutter is clearly shown by Fig. 104.

AN OPERATING SUGGESTION

In order to facilitate the "starting on" of the box tool, it is well to have the end of the work beveled, as in Fig. 105. The forming tool in finishing the head of the work simultaneously bevels a portion of the bar at E^1 which, when a new piece of work is being produced, becomes

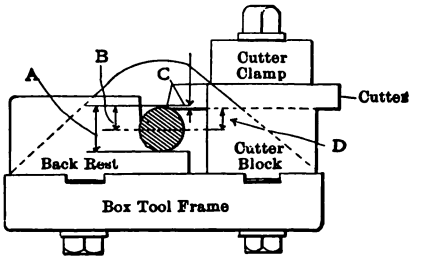

A = Full Diameter of Work
B = Half " " "
C = Amount Cutting Edge of Cutter is below a Line Tangent to Diameter of Work. (.002" to .005")
D = B-C

FIG. 103

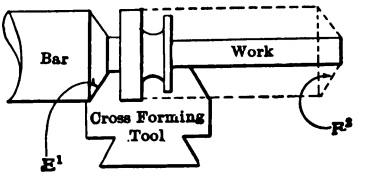

FIG. 105

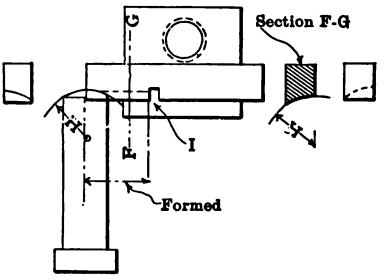

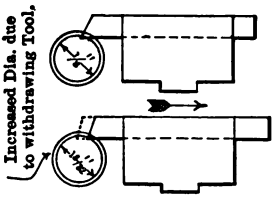

FIG. 104

FIG. 106

FIGS. 103–106.—Box-tool cutters.

E^2. The first cut of the box tool is thus made light and does not become heavy until after the support of the back rest has been secured.

Fig. 106 illustrates an end-pointing tool used on the type of box tool just referred to. The form is planed in the end of the cutter as indicated, thus permitting frequent grinding without altering the form. Sometimes for pointing work a special pointing-box tool is employed, carrying merely a back rest and a pointing cutter; frequently a regular roughing-box tool is utilized and the pointing cutter is held in the hollow shank and prevented from moving by a set screw.

Digitized by Google

CHAPTER XII

DRILLS, COUNTERBORES AND OTHER INTERNAL CUTTING TOOLS

The design of internal cutting tools is largely governed by the character of the material to be cut, the depth of hole, and, in tools for finishing, the amount of material left by the roughing tool for removal.

As with external cutting tools the clearance and rake of the cutting edges, the number of cutting edges, and the means of avoiding accumulation of chips must be considered in connection with the nature of the material to be cut.

STARTING DRILLS

It is generally advisable before attempting to drill a long hole to use what is termed a starting drill, which tool is usually either of the flat type, as shown in Fig. 107, or somewhat similar to a twist drill, only having short flutes like Fig. 108. The point should be quite thin and the lip angles more acute than the drill that is to follow, as in this event the outer diameter of the drill is permitted to cut before its blunt non-cutting center web comes in contact with the work. Fig. 109 illustrates a twist drill entering a piece of work that has previously been spotted with a starting drill, and the twist drill will be found to run true under these conditions. When the blunt center web of a drill is allowed to come in contact with the work first, as in Fig. 110, the value of the starting drill is not nearly as great as under the conditions in Fig. 109. For starting drills under $\frac{1}{4}$ inch in diameter the flat starting tool, Fig. 107, is very satisfactory, while for larger work, except brass and similar materials, the type illustrated by Fig. 108 is more commonly used.

SPOTTING AND FACING TOOLS

On long, slender work made of smooth stock close to size and which projects some distance from the head spindle it is generally found necessary to support the end of the work close to the point being spotted, and in such cases the starting or spotting drill is held in a holder which is also suitable for guiding the outer end of the work. Fig. 111 illustrates a tool of this type.

Digitized by Google

In some cases combination spotting and end-facing tools like Fig. 112 are used. This type of tool is very satisfactory on brass work, etc., but on harder materials, such as steel, which is more destructive to the cutting edges and thus makes frequent regrinding necessary, a tool holder having separate starting and facing cutters, as shown in Fig. 113, is preferable, as the independent adjustments allow frequent sharpening to be more economically accomplished.

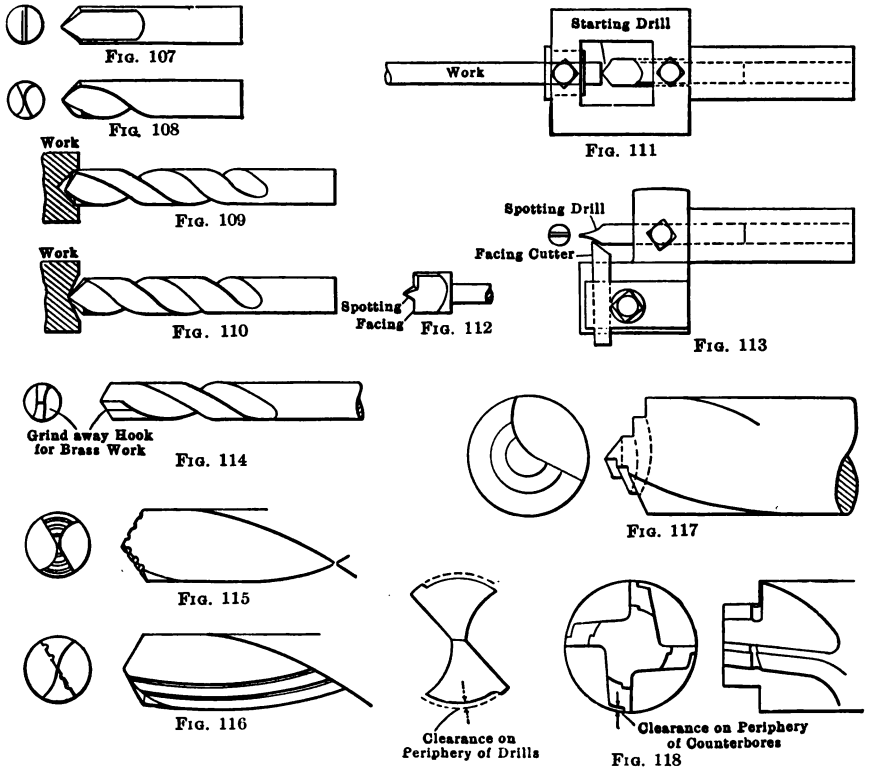

Figs. 107–118.—Spotting tools and drills.

TWIST AND STRAIGHT FLUTE DRILLS

In drilling cylindrical holes standard commercial tools are preferred owing to the convenience of replacement when they become worn out or broken. Ordinary twist drills are very satisfactory in steel and cast iron, although in very deep holes the chips are sometimes difficult to get rid of, and clogging up of the flutes and occasional breakage will then occur unless frequent withdrawing of the drill is resorted to. On brass and all free cutting stock the rake given to the cutting edges of twist

Digitized by Google

drills generally causes excessive curl to the chips and thus makes the automatic removal of the chips from the hole difficult. On automatic screw machines oftentimes a long curled chip is very objectionable as some machine functions may be interfered with. For these reasons, when twist drills are used in brass, it is good practice to reduce this rake by grinding in the lips at the front end, as in Fig. 114.

A two-lip, straight-fluted drill commonly known as a "Farmer" drill is generally superior to the twist drill in cases where the curling of the chips is troublesome, and in shops where brass work predominates, this drill is used much more commonly than the twist drill.

SERRATED, FLUTED AND STEPPED LIPS

The cutting edges of drills are sometimes serrated as indicated in Fig. 115 to produce narrower chips than would otherwise result and facilitate their easy removal. A similar effect is produced by fluting the drill, as shown by Fig. 116. Still another method of producing narrow chips is to step the end of the drill. It may be of interest to mention that this latter scheme is very commonly used in the one-lip drills for drilling long holes in gun barrels, spindles, etc. Fig. 117 will give an idea of this type of tool. When such a drill is carefully guided and advanced at a low rate of feed it is possible to drill a distance of 30 or 40 inches with not more than 0.010 inch curvature in the length of the hole. There is no center web to prevent free cutting as in the two-lip twist drill, and oil is forced under pressure to keep the cutting cool and conduct away chips. The use of oil in this manner is found very effective with all classes of internal cutting tools, except when operating in cast iron. It makes possible the running of work at a high peripheral speed without excessive heat, results in rapid cutting and insures long life to the cutting edges of the tool.

The center edge of all twist- and straight-flute drills should be thinned down at the cutting point, as the drill will then cut more freely and less power be required for the work.

BACK AND LAND CLEARANCES

Drills should have some back clearance, from 0.007 to 0.015 inch per foot being common practice. The land back of the cutting edge should be quite narrow as little land is required to support the drill and prevent chattering, while an excessive width increases friction and heat, resulting in the welding of chips to the drill along these surfaces and the consequent production of rough holes of varying diameter. Fig. 118 represents the manner in which drills and counterbores should be cleared on their peripheries.

Digitized by Google

The milling cutters used to flute twist and other drills should be of such form as to produce a straight cutting edge on the drill. If there is a curve to the cutting edge curved chips are produced which are difficult to bend or curl and such chips not only cause excessive heat, but severe strain on the cutting tool and frequent breakage of the latter.

The various steps on short internal cylindrical cutting tools should be tapered back about 0.020 inch per foot, and the peripheral contact reduced to a minimum so as to give ample chip clearance and avoid welding of chips.

FLAT DRILLS AND COUNTERBORES

Fig. 119 illustrates a type of tool commonly termed a flat drill, which is extensively used on brass work; it is especially recommended for such

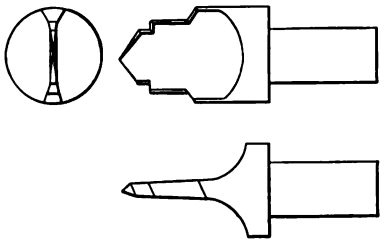

FIG. 119

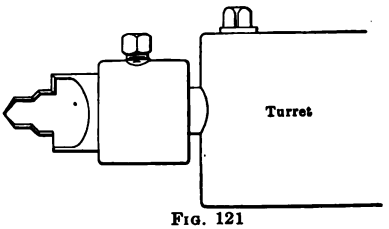

FIG. 121

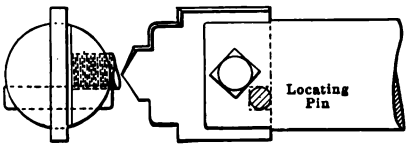

FIG. 120

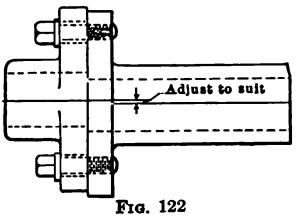

FIG. 122

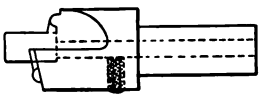

FIG. 123

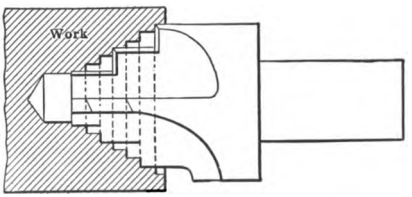

FIG. 124

FIGS. 119–124.—Flat drills and counterbores.

material where there are numerous shoulders or forms to be cut out. The tool has a cylindrical shank which fits a turret tool holder. On large work it is customary to make the flat drill of rectangular stock and utilize a special holder, as shown in Fig. 120.

Such tools when held in the turret, as in Fig. 121, should be placed

Digitized by Google

with the faces vertical so as to prevent them from cutting appreciably oversize if the indexing of the turret, due to wear, is not perfect. In the event of the turret holder after long usage being badly out of line, an adjustable holder should be used. A tool of this character is illustrated in Fig. 122.

A one-lip drill or counterbore with a helical cut, as represented in Fig. 123, is found superior in many cases as it permits of grinding the cutting edge without changing the form of the hole produced.

Counterbores as well as drills should have sufficient back and peripheral clearance but should not have too many cutting lips. A back clearance of about 0.020 inch per foot is satisfactory. For counterbores up to 1 inch three flutes or cutting lips are ample; more flutes are apt to result in insufficient chip space.

STEPPED COUNTERBORES

In making stepped couterbores where chips bother, it is conducive to good results to provide only one cutting edge for each step and to have successive cutting edges arranged spirally on adjacent cutting lips. Fig. 124 illustrates a stepped counterbore for roughing a hole that is afterward to be finished by a taper reamer. The advantage of this stepped counterbore lies in its producing a hole with a number of slight steps without an undesirable quantity of chips to wedge and cause trouble. For brass work the flutes of counterbores should generally be parallel with the body of the tool, while on steel the flutes should be cut so as to give a positive rake angle of 10 to 15 degrees; the deeper the hole to be counterbored the less the angle of the tool. For steel, and particularly in deep holes, internally lubricated counterbores are effective in keeping the edges cool and in forcing out chips. The various effects produced by counterbores with their cutting edges ahead or behind center, the value of proper rake and lubricants, are discussed in Chapter XVI on clinging of chips to screw machine tools.

MACHINE REAMERS

Machine reamers are generally used for finishing holes smoothly and to size, and consequently it is advisable not to leave too much stock for these tools to remove. On steel work from $\frac{3}{8}$ to 1 inch in diameter, from 0.004 to 0.008 inch is generally satisfactory, while in brass from 0.006 to 0.012 is a suitable amount. It is well to have the teeth of all reamers unevenly spaced, as there is then less liability of chattering than where even spacing is adopted.

Cylindrical reamers should cut only on the front end in entering

Digitized by Google

hole; they cut back of the front end, on the lips, only when the material being reamed alternately expands and contracts through undue pressure or variation in temperature produced by the cutting action. This latter is particularly noticeable in brass tubing. Most cylindrical reaming tools like Fig. 125 are cleared the entire length of their cutting lips as well as having a back taper of about .004 inch per foot. For reaming steel where it is desired to produce an accurate smooth hole the so-termed rose reamer, Fig. 126, is excellent. This tool can cut only on the front end, and must be well lubricated and not forced so as to expand

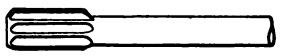

FIG. 125

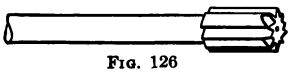

FIG. 126

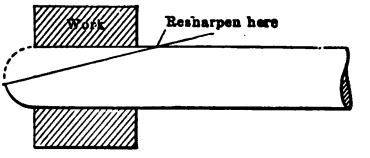

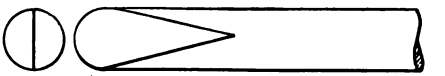

FIG. 127

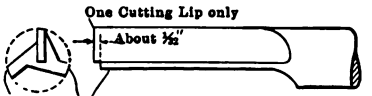

FIG. 128

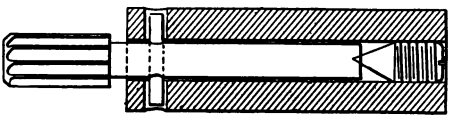

FIG. 129

FIGS. 125–129.—Reamers and reamer holder.

the work. It will ream holes under these conditions that are satisfactory to the most exacting. For this work a rose reamer is better than a reamer with peripheral clearance, as its weight is more satisfactorily supported and there is thus more certainty of a round hole being reamed. A rose reamer, as intimated, has no peripheral clearance on the flutes, but should be back-tapered about 0.004 inch per foot.

THE CUTTING EDGES

The cutting edges of reamers are seldom undercut and are generally on center, although for brass it is considered by many advisable to mill the cutting edge ahead of center and so secure a scraping cut. The flutes are generally milled parallel with the body of the reamer, but in many cases a spiral-fluted reamer has been the means of obviating chattering.

The spiral should be cut left-hand to prevent drawing in. In small work, particularly brass, a flat reamer like Fig. 127 gives good results.

Digitized by Google

It is inexpensive to make, and may be readily re-sharpened as indicated.

Reamers or, more correctly, boring tools with three flutes and with only one cutting edge, as shown by Fig. 128, are found very useful for producing straight, deep holes.

REAMER HOLDERS

Usually reamers for cylindrical holes (and sometimes finish counterboring tools) are carried in holders permitting of a floating action of the reamer. When a reamer is held rigidly in the turret hole there is almost a certainty of its cutting an oversize and tapering hole due to the impracticability of retaining the turret hole in perfect alignment with the work spindle. There are a variety of floating reamer holders used. A simple form is illustrated in Fig. 129. With a reamer held in a suitable floating holder and providing the end of the hole that is to be reamed has been bored out so as to run true, and from 0.003 to 0.015 undersize, there should be produced a hole true to size and concentric.

NUMBER OF FLUTES IN REAMERS

The number of flutes cut in ordinary reamers should be as indicated by the following table:

Hand.	Chucking
$\frac{1}{8}$ to $\frac{7}{32}$ diameter 4 flutes	$\frac{1}{8}$ to $\frac{7}{16}$ diameter 6 flutes
$\frac{1}{4}$ to $\frac{15}{32}$ diameter 6 flutes	$\frac{1}{2}$ to $1\frac{1}{4}$ diameter 8 flutes
$\frac{1}{2}$ to $1\frac{1}{4}$ diameter 8 flutes	$1\frac{5}{16}$ to $1\frac{11}{16}$ diameter 10 flutes
$1\frac{9}{32}$ to $1\frac{23}{32}$ diameter 10 flutes	$1\frac{3}{4}$ to $2\frac{3}{16}$ diameter 12 flutes
$1\frac{3}{4}$ to $2\frac{7}{32}$ diameter 12 flutes	$2\frac{1}{4}$ to $2\frac{3}{4}$ diameter 14 flutes
$2\frac{1}{4}$ to $2\frac{3}{4}$ diameter 14 flutes	$2\frac{3}{16}$ to 3 diameter 16 flutes
$2\frac{25}{32}$ to 3 diameter 16 flutes	

TAPER REAMERS

Taper or formed reamers should be provided with clearance the entire length of their cutting lips. The lips or lands instead of being continuous are in the case of long reamers usually serrated by means of a narrow left-hand spiral groove, and this breaks up the chip into a number of curled strips instead of producing a single wide one. The flutes in taper reamers are sometimes milled left-hand so as to

Digitized by Google

prevent pulling in, and sometimes right-hand to assist in cutting. On slight tapers any tendency to draw in must be obviated owing to the risk of breaking the tool, while on steep tapers which resist the feeding in of a tool an opposite effect is desired.

In practice, therefore, it is found satisfactory from the cutting point of view, to make the flutes left-hand in reamers producing holes tapering from 0 to about 1½ inch per foot. From 1½ to 2¼ inches taper per foot the flutes may be straight, while on tapers greater than this a right-hand flute is satisfactory. This latter gives a positive rake to the cutting edge, and less end pressure is required to force the tool to the cut than with straight or left-hand flutes.

The cost of making tools with right- or left-hand flutes is somewhat greater than for straight flutes, and grinding is not so readily accomplished with ordinary equipment, hence straight-flute taper reamers are more commonly used.

RECESSING TOOLS

Recessing tools constitute still another class of internal cutting appliances used on screw machine work for forming grooves and

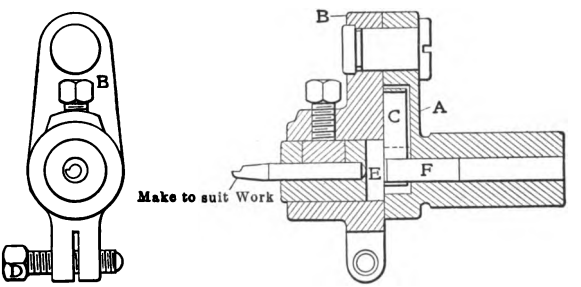

FIG. 130.—Recessing tool.

chambers in pieces after they have been drilled or bored out as required. There are many types of recessing appliances, and one is illustrated in Fig. 130. The body *A* has a shank fitting the turret hole, and carries a stud upon which is pivoted the tool holder *B* in which is inserted the cutting tool. This swinging member *B* is held normally in central position by loop spring *C*. In operation, after the tool has entered the hole in the work to the required point the cross slide advances, and, acting upon adjusting screw *D*, presses the holder *B* toward the rear and causes the tool to cut the internal channel in the work. If a chamber or recess of some length is to

Digitized by Google

be formed, the turret slide then advances and the tool takes a boring cut along the side of the hole. Upon completing its work, the tool is relieved by the cross slide receding, and is returned to central position by spring *C*, which presses the pivoted tool holder *B* forward until a stop plug *E* contacts with stop pin *F* in the shank. The turret then withdraws the tool from the work.

Digitized by Google

CHAPTER XIII

SCREW MACHINE TAPS AND DIES

Taps and dies form a very interesting topic for discussion among toolmakers, and as the conditions under which they are used to have quite a bearing on their correct design, it is the case that ideas as to their specific design are greatly at variance. Possibly the selection of the steel used and the manner in which the hardening is accomplished have a more important bearing on results than in the case of any other class of cutting tools. This chapter is not intended to cover this phase of the subject, but it may be opportune to state that in our experience it has been found best from an economical standpoint to temper a tap quite a little lower than a die. Exceedingly hard, brittle taps are liable to frequent breakage on account of their relatively weak cross-section and small chip space as compared with a die.

Keeping taps sharp is more economical than continually making new ones to replace those breaking on account of being unduly hard. A die, however, may be designed as to have ample metal for strength and much more chip room than the tap, and consequently breakage from this cause is not so liable to occur as with the top. Furthermore, re-grinding of a die is considered more difficult than re-grinding a tap, and therefore the die is generallly left harder than the tap. The speed of work while external threading operations are performed may be higher than for internal threading on account of the foregoing reasons and also because of greater facility for properly lubricating. Tables of speeds for dies and suggestions on lubricating are given in Chaps. IX and XVI.

TYPES OF DIES AND TAPS

Fig. 131 represents what is commonly known as a spring screw-threading die, with its clamping or size adjusting ring, and Fig. 132 a button die. Both of these tools are used extensively in the automatic screw machine. On large work dies with inserted chasers, one form of which is shown in Fig. 133, are found very satisfactory. Various

Digitized by Google

types of opening dies are also being successfully used on different classes of work.

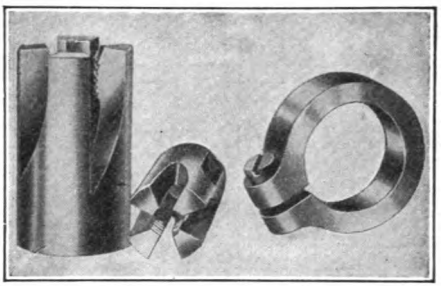

FIG. 131.—Spring-screw threading dies.

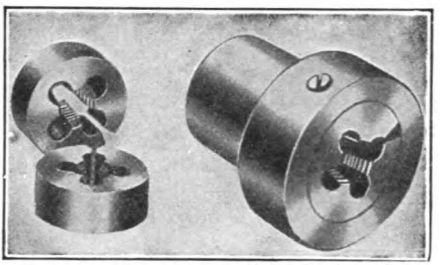

FIG. 132.—Button dies.

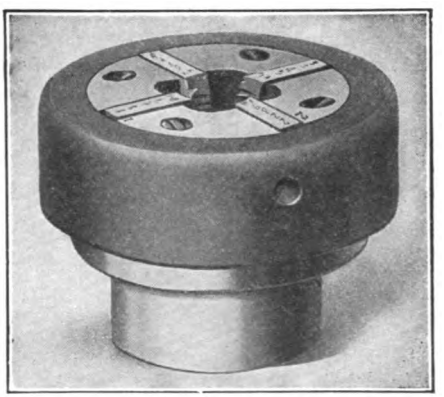

FIG. 133.—P. & W. inserted chaser die.

Taps are generally made solid, although there is doubtless economy in the inserted blade type of tap when of large dimensions. Collapsing taps are also made for some lines of work.

Digitized by Google

SPRING DIES

Owing to the movable parts which may affect perfect alignment between the turret hole and the head spindle of turret machines, it is found impracticable to hold dies or taps, even if perfectly true and concentric, directly in a turret hole or in a rigid non-adjusting tool holder. Ordinary commercial spring screw-threading dies, even when mounted in holders permitting of side play, are apt to produce better results if made with three cutting edges, as in Fig. 134, than if provided with four or more cutting edges. With the latter, the result due to changes in hardening or imperfect workmanship is apt to be that only two diametrically opposite teeth are simultaneously cutting, as shown in Fig. 135. This causes the die to vibrate and produce a rough thread, with chatter marks. With commercial dies having three cutting edges and providing that they are mounted in a free holder these troubles are greatly reduced. On one occasion, in the designing and tooling of 76 turret machines for a foreign order, about half of which machines were automatics, it was decided to make all of the spring screw-threading dies with *three teeth only*. The diameters of work to be threaded were from 3 millimeters (approximately $\frac{1}{8}$ inch) to 32 millimeters (approximately $1\frac{1}{4}$ inches) and the threads per inch, with the exception of the large sizes, somewhat less in number than United States standard. The parts to be machined were of low-carbon tool steel, cold drawn machinery steel, brass, and also some copper. Excellent results were obtained in hardening, and only three dies were cracked or ruined by the fire. *There was not a single die which gave any trouble whatsoever* when setting up and testing the equipment. This record would have been impossible with four-tooth dies.

TAPPING OUT THE DIE

It is good practice in making spring screw dies to either hob out the thread with a hob tap 0.005 to 0.015 inch oversize, according to size, and in use to spring the prongs to proper cutting size by a clamping ring as shown in Fig. 131, or to tap the die out from the rear with a hob tap tapering from $\frac{3}{16}$ inch to $\frac{1}{4}$ inch per foot, leaving the front end about 0.002 inch over cutting size, and in this case also to use a clamping ring, Fig. 131. Both of these schemes are for the purpose of obtaining back clearance and are effective. Theoretically, the use of the taper hob is the best, and is to be preferred especially when work is to be cut with threads of included angle less than 40 degrees, as the shape of thread produced by clamp-

Digitized by Google

ing the prongs of the die to a size below that at which it is hobbed may then be effective enough to be decidedly unsatisfactory. Fig. 136 illustrates this bad feature.

Fig. 137 illustrates the die with the taper somewhat exaggerated, as made with a taper hob and the general internal form of a very satisfactory spring screw-threading die.

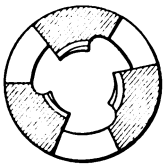

Fig. 134

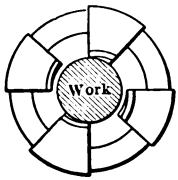

Fig. 135

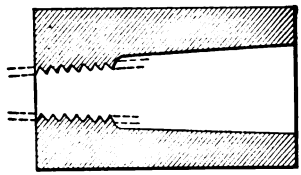

Fig. 137

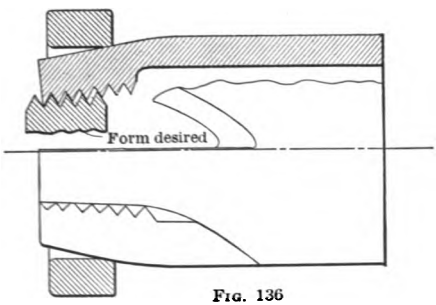

Fig. 136

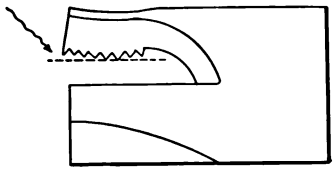

Fig. 138

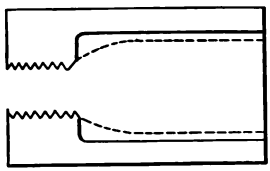

Fig. 139

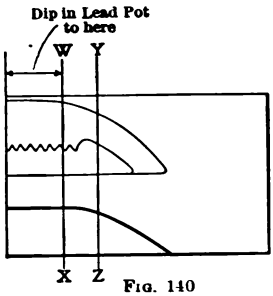

Fig. 140

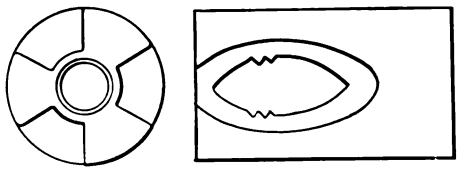

Fig. 141

Figs. 134–141.—Spring dies.

HARDENING

In hardening a die it frequently happens that curves to the lips are produced as in Fig. 138. When clamping the prongs of an oversized hobbed die (with such curvature) down to size, this will still result in a bell mouth die. With a die hobbed out with a tap of

Digitized by Google

sufficient back taper, as in Fig. 137, the curve, if it exists, will not result in a bell mouth; the clearance angle being more pronounced than with an oversize tapped die, neutralizes the curvature. The internal form shown by full lines in Fig. 139 is bad, as the thickness of metal varies so that in hardening trouble will result. In Fig. 137, and as shown by dotted lines in Fig. 139, is a more satisfactory internal form.

Probably the best practice in hardening is to dip the prongs into the lead pot not further than dotted lines *W–X*, Fig. 140, in which case less trouble will result, and the heat will still be sufficient to cause the remaining portion of the prongs to be sufficiently hard when chilled, to prevent welding of chips, etc.

In case the hardening effect extends back into the curve as at *Y–Z*, side-twisting of the prongs is almost a certainty, and the cutting edge of the die in this event will not be in contact with the work, but a portion back of the cutting edges will be dragging on the work which will cause a ragged thread and oftentimes break off the piece being threaded.

In spite of care there is much risk in the *length* of the prongs being at variance after hardening, and it is conducive to good results to leave a tie to the prongs as shown in Fig. 141. This tie can be removed in two or three minutes by the use of a slitting emery wheel.

With a three-prong die it is possible to provide lips of generous cross-section, giving rigidity. The undesirable friction due to too much thread in contact with the work is overcome by milling out as in Fig. 134, to suit the material being threaded.

CUTTING EDGES

The cutting edge of a spring screw die is generally radial for brass, and it is permissible for the edge to point a trifle below center, particularly when there is any possibility (owing to the ease of cutting) of there being a strong chip produced which may cause a "hogging in" action. On steel or material not free cutting, and which opposes the cutting action, it is desirable to have a positive rake to the cutting edge so as to make the cutting action easier, hence the cutting edge is generally above center. The amount is only limited by the chip curling so as to be objectionable on account of clogging, or by the rake being so much as to cause too free cutting, and consequently the production of a big, strong chip and the "hogging in" action which in this event, owing to the cutting edge being above center, produces very bad results.

It should be observed that where large diameters of brass are to

Digitized by Google

be threaded and where the die is so rigid that no springing action can take place, the radial-cutting edge is not as desirable as where there is positive rake to the edge.

Chattering, etc., on large work is generally due to weakness of tool or tool holder, and increased rigidity in these oftentimes makes possible an increase of clearance and particularly an increased positive rake to the cutting lip angles of all tools, with the result of better cutting action.

It is desirable in spring screw dies to make the outside true with the axis of the thread and cutting edges, and consequently it is found desirable to grind the outside diameter from the thread. This is of particular value in connection with the outside clamping or sizing ring, as it assists in adjusting the several prongs of the die equally, as well as making it unnecessary to provide undue freedom in the die-holding device.

On large work, where inserted chaser dies may be utilized, it is evident that more than three cutting edges can be used with very little of the difficulty common to the spring screw die, as distortion due to hardening is less, and if it exists at all, it can be compensated for if necessary. Furthermore, the desirable side clearance to each chaser may be readily given to this type. Where more than three teeth are found desirable it is always better to have an odd than an even number of teeth, as the possibility of only two teeth cutting is then avoided.

MAKING INSERTED CHASERS

With inserted chaser "opening dies" it is becoming quite common practice to mill the threads of the chasers with a milling cutter, thus giving straight and ample clearance, instead of hobbing with a master tap, which latter gives very little clearance unless greatly oversize.

A feature emphasized by those milling chasers, instead of hobbing, is that when dies or chasers are cut by a master tap there are three inherent errors which if accumulative may be sufficient to make it impossible to obtain perfect pitches. There is first the error of the lead screw in the lathe used in cutting the master hob; second, the error in the hob due to hardening; third, the error in the die or chasers due to hardening. If these three errors act cumulatively the result is that an inaccurate die is produced. By milling the chaser the first two errors may be eliminated, leaving only the error caused by hardening the chaser, and this last error may be kept small by hardening only the cutting edge, the unhardened material at the rear having an important effect in preventing distortion.

Digitized by Google

It is furthermore advanced by some that in milling the thread of a chaser the metal is not compressed as it is with a tap; that with a tap the metal is not really cleanly cut, but is, so to speak, more or less pushed off as the tap has no clearance and the resulting surface is left in a state of strain which relieves itself when hardening, thus increasing the distortion both in form and in pitch.

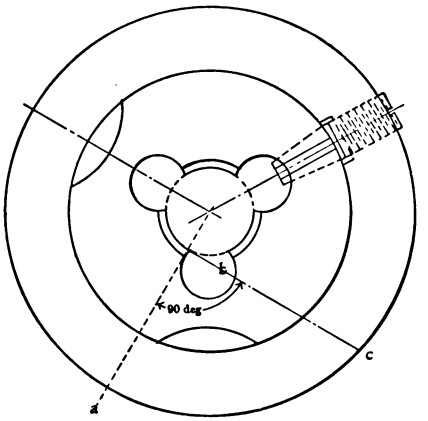

FIG. 142

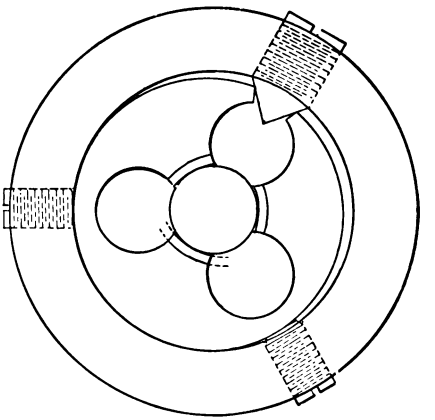

FIG. 143

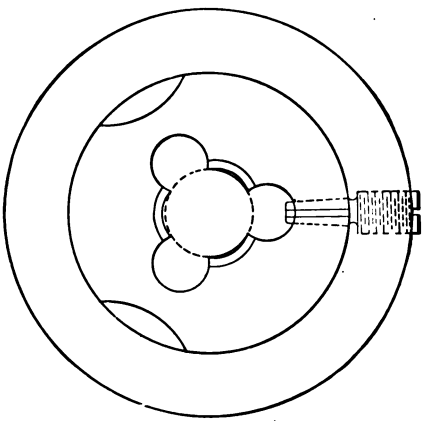

FIG. 144

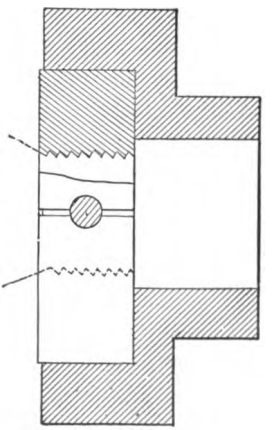

FIG. 145

FIGS. 142–145.—Button dies.

BUTTON DIES

The shape of the round button die gives it an advantage over the spring screw die in hardening, and this type of die is in considerable favor with many on small work. It is not considered as convenient to re-sharpen correctly as the spring screw die, but the low original

Digitized by Google

cost of button dies permits them to be discarded when dull. Chips on coarse pitches are not so easily gotten rid of with the button die as with other types. It has, however, when correctly made, some very good features, and when fully understood and made in proper manner it is very satisfactory for screws $^{5}/_{16}$ inch diameter and under. Owing to the rigidity of the button die the cutting edge of the tooth may always be ahead of the center for brass, as well as for steel, and good results follow.

This type of die should be made substantially as in Fig. 142, and instead of hobbing with an oversize hob, an undersize hob is superior, the die being expanded to proper cutting size. The reason for this is that, with the cutting edge of the teeth *ahead* of center and providing an oversize hob be used, the relation of the cutting edge to the work would be as shown in Fig. 143, when *closing down* the die which, when exaggerated as shown, emphasizes the bad cutting action which exists under normal conditions to an objectionable extent. When the die is *expanded*, as shown by Fig. 144, the clearance of the threaded portion of the die is in the center, where it is desirable that it should be, and the cutting action is excellent. When reversing the work for the removal of the die there is no danger of the wedging in of chips.

This type of die, on account of the chance it affords for what would ordinarily be considered an excessive rake without springing, is found very satisfactory for cutting copper.

In the button die, as shown in Fig. 142 and Fig. 145, it should be noted that the expanding wedge is a taper pin which acts as a tie and prevents a twist to the die which might occur from hardening if a wedge were used as in Fig. 143. The line *a*, Fig. 142, representing the cutting edge of the die, may be pointed on center or above, as desired, and then the center of hole *b* is located on line *c* so that the edge of the hole is tangent to the line *a*.

APPLICATION OF DIE TO WORK

Most dies are chamfered, so as to cut smoothly and to assist in starting on to the work, as in Fig. 145, but it sometimes is necessary to cut very closely to a shoulder with one die only, and in this event there can be but little chamfer. It will be of assistance in starting the die under these conditions, when work permits, to bevel the end of the work as indicated in Fig. 146, prior to running the die on, and afterward remove the bevel at *a*, if objectionable.

It sometimes happens that very short threads have to be produced, as shown at *A*, Fig. 147. An effective method of producing such work

Digitized by Google

is to first cut a long thread and afterward face off the extra portion between neck *B* and the end of the piece. The nicking at *B*, previous to cutting the thread, is necessary to prevent a burr, which would otherwise be produced by the facing tool.

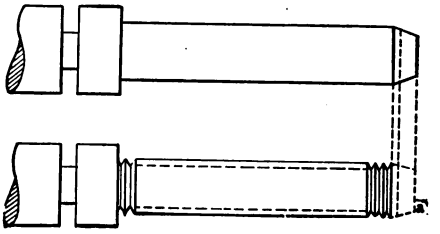

FIG. 146

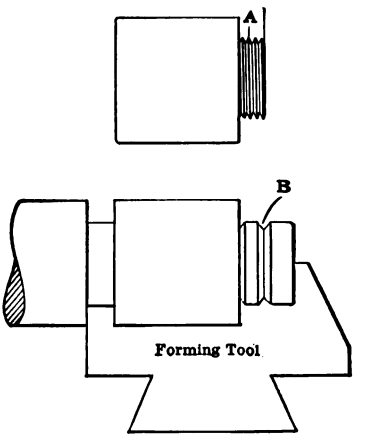

FIG. 147

FIGS. 146–147.—Threading work.

INTERNAL THREADING

Thus far this chapter has been confined to the external threading of work; it should be remembered that many of the conditions are common to internal threading operations also.

Taps have their cutting edges cut radially in most cases, though on brass it is desirable to cut below center, thus breaking up the chip for its more easy removal. A free curling chip is undesirable when tapping, unless the stock is of such a nature that tearing of work will result in case the cutting edge is not such as to produce such a chip. Copper is a material of this nature, and a tap made like Fig. 148 with a big rake to its cutting edge works out nicely. On

Digitized by Google

copper and similarly acting material, cutting out every other tooth, as is done on the Echols patent tap made by the Pratt & Whitney Company, is found an efficient means of producing clean threads. Fig. 149 illustrates this tap and also shows it entered in a piece of work; Fig. 150 represents an ordinary tap.

In the former (which is always made with an odd number of flutes), each alternate tooth is omitted, the arrangement being so carried out that each of the cutting teeth is followed by a space and

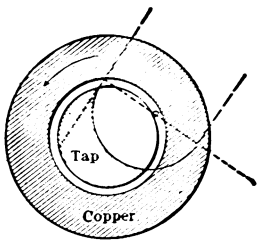

FIG. 148

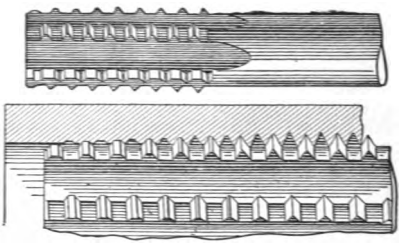

FIG. 149

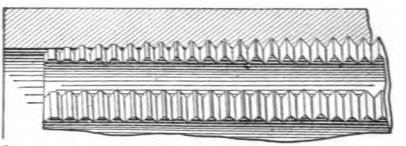

FIG. 150

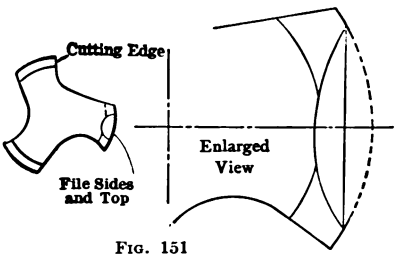

FIG. 151

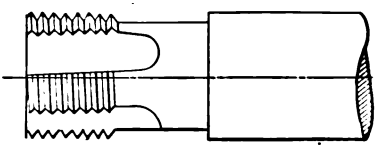

FIG. 152

FIGS. 148–152.—Several kinds of taps.

each space by a tooth. This arrangement gives a freedom of action to each cutting tooth not obtainable with the ordinary form of tap. In tapping holes with ordinary taps in copper and similar material the tendency is to tear the threads, owing to the wedging action of the cutting teeth, and the slight resistance offered by the metal to the pressure of the continuous row of cutting edges. The chips are carried forward in a mass in front of the cutting teeth, and unless the tap is frequently reversed, thus breaking up the mass of chips, the thread will either be mutilated or the tap broken.

It will be seen upon examination of Fig. 149 that only one side

Digitized by Google

of the thread that is being formed with the tap there shown is operated upon at once. It is thus relieved of one-half the pressure and wholly of the wedging action, and because of the absence of the next adjacent threads, a slightly lateral movement of the thread being formed is possible, owing to the mobility of the metal. It is probable that under similar conditions the removal of alternate teeth in a die would be of value.

LENGTH AND NUMBER OF LANDS

The number of teeth in regular taps and width of land should be regulated by the diameter and pitch of work as well as the nature of the material being cut. On "sticky" material both dies and taps should have relatively short land. On fine threads, where a drunken thread is to be insured against, more teeth are required than on a coarser pitch of the same diameter. A good average number of teeth on taps for United States standard threads is given in the following schedule. Too few teeth and too short land afford very little support and many cause chattering; too much land in contact causes heat due to excessive friction and welding of chips, torn threads, etc.

Outside Diameter	No. of Flutes	Width of Land
$\frac{3}{16}$	4	$\frac{3}{64}$
$\frac{1}{4}$	4	$\frac{1}{16}$
$\frac{5}{16}$	4	$\frac{5}{64}$
$\frac{3}{8}$	4	$\frac{3}{32}$
$\frac{7}{16}$	4	$\frac{7}{64}$
$\frac{1}{2}$	4	$\frac{1}{8}$
$\frac{5}{8}$	4	$\frac{5}{32}$
$\frac{3}{4}$	4	$\frac{3}{16}$
$\frac{7}{8}$	4	$\frac{7}{32}$
1	4	$\frac{1}{4}$
$1\frac{1}{4}$	4	$\frac{5}{16}$

TAP RELIEF

Taps for use in the screw machine should permit reversing of the work without any chance of chips wedging at this point, and consequently are not cleared the same as hand taps which go entirely through the work and are thus removed without reversal.

Fig. 151 illustrates the way to relieve the top and sides of the teeth of screw machine taps. A tap for long cylindrical threading should in addition be slightly tapered toward the back so as to free itself.

Digitized by Google

This taper should be about 0.020 to 0.030 inch per foot, although conditions may make it desirable to vary this somewhat.

Where a tap is used on steep triple and quadruple threads it is customary to cut the flute on a spiral so as to present a square cutting face like Fig. 152, which is self-explanatory.

SIZING WORK FOR THREADING

In boring holes previously to tapping they should be somewhat larger than the theoretical diameter at bottom of thread, as the crowding action of the tap will cause the metal to flow some and compensate for this. Where no allowance is made, frequent tap breakage is liable to occur and torn threads in the work also. On external work it is for the same reasons advisable to turn the work undersize; the following table gives good average allowances for both internal and external work:

Threads per Inch	External Work, Turn Undersize.	Internal Work, Increase over Theoreitcal Bottom of Thread
28	0.002	0.004
24	0.002	0.0045
22	0.0025	0.005
20	0.0025	0.0055
16	0.003	0.006
14	0.003	0.0065
13	0.0035	0.007
12	0.0035	0.007
11	0.0035	0.0075
10	0.004	0.008
9	0.004	0.0085
8	0.0045	0.090
7	0.0045	0.0095
6	0.005	0.010

SPRING DIE SIZES

It may be of value to include a table of suitable dimensions for spring screw dies, and the data in the sketch, Fig. 153, should prove of service, particularly for steel. For brass the cutting edge is radial, thus eliminating dimension *A*. The width of land at bottom of thread is usually made about ¼ O. D. of cut, the milling between flutes being 70 degrees for the flute and 50 degrees for the prong in the case of three-flute dies.

Digitized by Google

SIZING DIES AND TAPS

As most all dies have means for slight adjustment, it is not necessary to use the same care in sizing them as in the case of taps which are generally non-adjustable. Dies may be "chased out" to fit a male-threaded plug and a tap to suit a female gage. In the event of having only a plug or a sample to work to, the ball-point micrometer is very convenient in comparing diameters when cutting the thread on a tap. In making taps to a drawing or specification, it is of assistance to turn a portion of the tap to the theoretical bottom of the thread and then with properly formed threading tools, to use this part as a gage when sizing the tap, either copper plating with

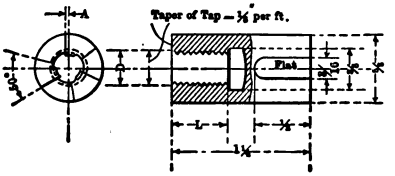

D =	1/16	3/32	5/32	1/4	5/16	#8	#4	#6	#8	#10	#12
Th'ds P.I. =	64	40	32	20	18	56	40	32	24/32	24/32	24/32
A = D/10	.006	.012	.009	.025	.031	.009	.011	.014	.008	.009	.021
L =	3/16	9/32	3/8	1/2	1/2	7/32	1/4	9/32	5/16	11/32	3/8

D =	3/8 to 1/2	1/2 to 3/4	3/4 to 1
Th'ds P.I. =	Std.	Std.	Std.
A =	D ÷ 10	D ÷ 10	D ÷ 10
L =	3/4	1"	1 1/4
O.S.Dia.	1"	1 3/8	1 3/4
Length	2"	2 1/4"	2 1/2"

FIG. 153.—Spring die dimensions.

blue vitriol and burnishing the plate with the thread tool or dispensing with the plating and using a good eye-glass to detect when actual contact between the threading tool and tap blank at gage-point takes place.

TESTING THREADING ACTION

When in doubt as to the proper cutting action of a die or tap it is advisable to carefully turn or bore a piece of work, then thread the work under normal conditions. Now stop the work with the cutting action taking place, and in the case of external threading, note whether all the cutting edges are producing an even clean chip, or pushing the thread off. In case the thread in the die is smooth and the cutting edges are sharp and have been properly lubricated and the work is poor, the chances are that the angle of rake or the clearance is at fault.

Digitized by Google

To examine the hole tapped out the work must be carefully sawed into two pieces.

DIE HOLDERS

Holders for die and taps for the automatic have much to do with the success of these tools. Fig. 154 shows a very satisfactory holder made by the Pratt & Whitney Company. This appliance was developed for use in a screw machine whose spindle reverses very rapidly.

Among the important features of this particular die holder are the following: The backward movement of the sliding die holding head *a*, which, as usual, occurs in running off the die or tap from the work, is never opposed by the guide fingers *b b'*, should they strike against the ends of driving pins *c c'*, as the guide fingers being pivoted at *d d'* swing out in this event. This prevents stripping of the thread. The spiral springs *e e'* serve to return and retain the guide fingers in their normal parallel position which is required when the die or tap is cutting a thread.

The edges of the guide fingers which come in sliding contact with the driving pins as shown are beveled to an angle of 15 degrees with the line of travel of the die head. This angle obviously results in a freer forward movement to the die head than when there is a parallel sliding action, and also insures the lead of the thread conforming very closely to that of the die or tap. The angle could be carried to such a spiral as to tend to push the sliding head forward immediately the die has caught. The 15-degree slope, however, has proved very satisfactory.

At *f* is shown a spring cushioning plunger which prevents undue shock when catching the first thread on the work, and is especially efficient when cutting threads finer than 32 per inch.

ADJUSTMENT FOR LENGTH OF THREAD

Positive and uniform length of the thread being cut is insured by adjusting the self-locking stop screw *g*. This stop screw determines the amount of travel which the die head *a* may have without rotating with the work. For instance, should it be desired to cut a ⅜-inch length of thread, it is only necessary to adjust the nut forward until the amount of lap which the driving pins *c c'* have on guide fingers *b b'* is equal to ⅜ inch, as indicated at *h*.

After the die head has traveled forward enough to free the driving pins, no further thread cutting occurs, as the die head, then being free, revolves with the work. When the spindle and work are reversed the die head usually reverses also until the lip on the groove in the

Digitized by Google

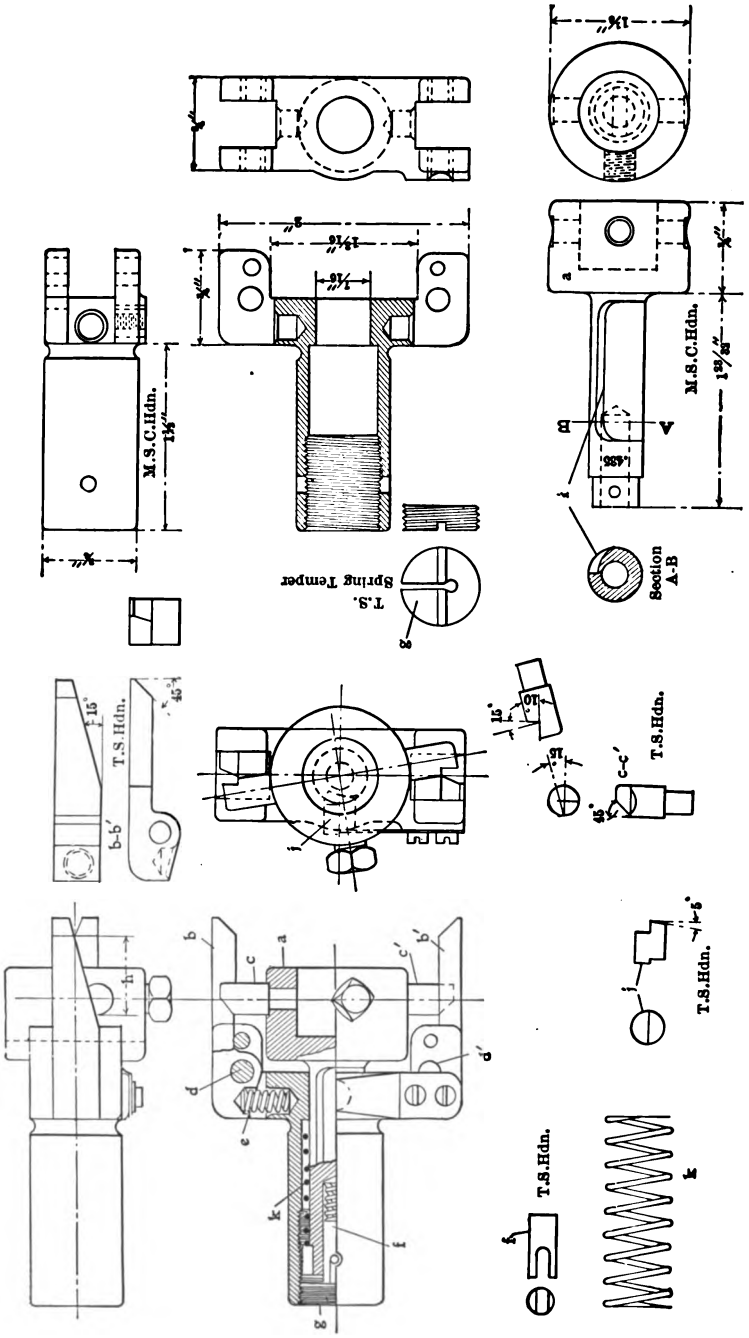

FIG. 154.—Releasing die holder.

Digitized by Google

die head at *i* comes in contact with the spring-actuated pawl *j*. This, of course, prevents further reverse rotation of the die head, and as the work continues to rotate the die is unscrewed.

In case the die head due to its inertia does not reverse with the work (as does happen occasionally), and should the driving pins and fingers in this event be in direct line, there is no danger of stripping the threads, for the guide fingers as before mentioned will under these conditions be caused to swing outward during the backward movement of the head by the driving pins.

A light spiral spring *k* serves, when the die is not cutting threads, to hold the die head back in the body with cushioning plunger against the stop screw, and in use has the advantage of preventing the marring of the first few threads on the work when backing off the die providing after the thread has been cut, and previous to reversal of the work, the turret, together with the holder, be pulled backward a distance equal to a couple of threads. This causes the spring to be in tension, and, after the spindle has been reversed and the die unscrewed from the end of the work, the spring brings the die head and die clear of the end of the piece that has been threaded.

On account of the fact that absolute alignment of turret and spindle is not always retained and as dies spring in hardening, a slight floating action between the sliding die head and body is allowed. Referring to the detail of the head, it will be seen that the shank is 0.435 inch diameter while the hole in the body is 0.4375 inch.

In some cases where old machines are used, considerably more than this freedom may be advisable; too much freedom, however, is bad, for then trouble may result in starting on the die.

Digitized by Google

CHAPTER XIV

FORMING TOOLS AND METHODS OF MAKING THEM

Quite a variety of types of cutting tools and holders have been developed for cross-forming work on the automatic screw machine.

For brass work flat-formed blades such as shown in Fig. 155 or solid forged tools as in Fig. 156 are found very satisfactory, owing to its being possible to obtain with these perfect side and peripheral clearances.

Where frequent sharpening of the tool is required and where the form produced must be kept uniform, these tools are not always satisfactory, and a tool whose cutting edge can be sharpened without any alteration to its contour is generally preferred. Fig. 157 illustrates what is usually known as a circular forming tool. The grinding is done on face *a b c d*, the form as indicated extending entirely around the periphery. Fig. 158 illustrates another type of forming tool which admits of the cutting edge being re-ground without alteration of its contour. This is known by various names, a very common one being "dovetail forming tool" from the fact of its generally having a dovetail to fit into its holder. To prevent any confusion this tool will be referred to as a dovetail forming tool hereafter in this chapter. These tools are generally held and fed in such a manner that the cutting edge is on a radial line with the work being formed. In some special cases, however, it is found more satisfactory for the tool to travel tangentially to the work instead of radially.

COMPARISON OF TYPES

There are various things to be taken into consideration when determining whether to use a circular or a dovetail forming tool, and the following points may be of assistance when making the decision:

1. The peripheral clearance angle being constant in both circular and dovetail tools, as shown by Fig. 159, it is clear that in the dovetail type there is more metal directly under the cutting edge than in the circular tools to conduct away the heat which is produced while forming.

Digitized by Google

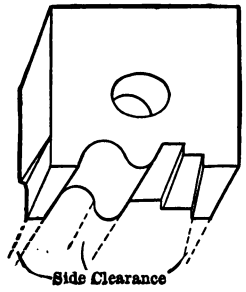

Fig. 155

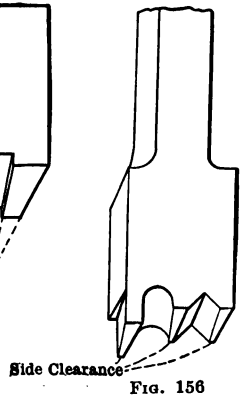

Fig. 156

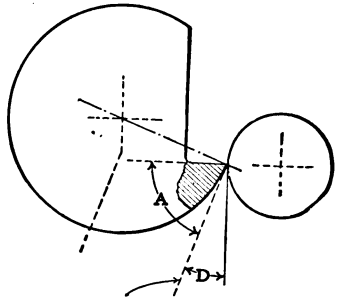

Dotted Line is Clearance Angle of Circular Tool and Corresponding Edge of Dovetail Tool.
Cross Hatched Space indicates Metal in Circular Tool to Conduct away Heat.
A indicates Metal in Dovetail Tool to Conduct away Heat.
D Amount of Clearance at Cutting Edge.

Fig. 159

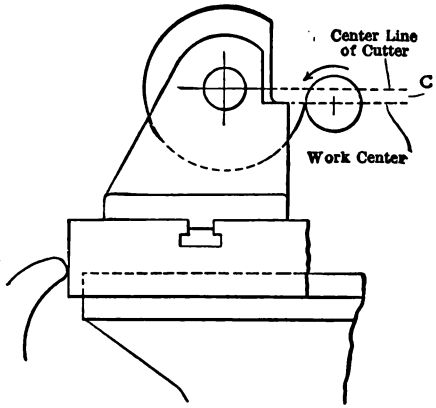

Fig. 162

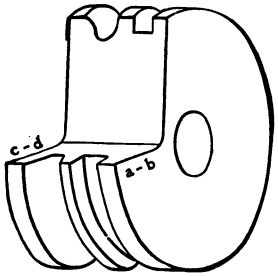

Fig. 157

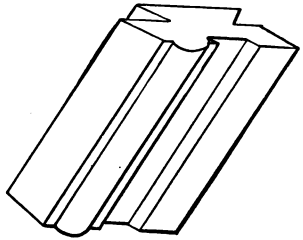

Fig. 158

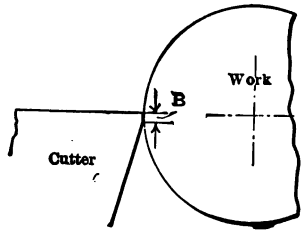

Fig. 160

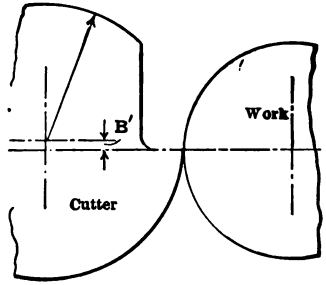

Fig. 161

Figs. 155–162.—Forming tools and their clearances.

Digitized by Google

2. The difficulty and cost of producing an accurate and smooth form leave much in favor of the circular forming tool.

3. The type of tool post required for a circular forming tool oftentimes interferes with turret tools simultaneously operating on work with the cross-slide tools. The dovetail type of tool permits of the use of holders which do not thus interfere.

4. The increasing peripheral clearance of a circular forming tool permits a lesser angle to be utilized at the point of cutting than with the dovetail type, and this lesser angle has a tendency to prevent chattering on account of the support afforded. With the dovetail type, stoning the clearance face is sometimes resorted to, which in effect gives a lesser angle at the cutting point, as indicated in Fig. 160 at *B*.

A similar result with the circular tool *without* stoning the clearance edge is obtained by properly determining the relation of the center of the cutter to the center of the work as shown at *B'*, Fig. 161. Raising or lowering the cutting edge of the tool changes the clearance angle and incidentally changes the form produced. Consequently the clearance angles and the relation of the center of the cutter holding bolt to the work center are points which it is necessary to consider carefully.

DIAMETERS AND CLEARANCES

With a given material the larger the diameter of the work the greater the angle of clearance required. Clearance angles are seldom less than 7 degrees and seldom over 12 degrees except on work out of the ordinary run.

The diameter of circular forming tools is an important point to consider. A small diameter has a more pronounced change of clearance angle than a large diameter. In fact, when of an exceedingly large diameter the circular tool approaches in cutting action the dovetail type of tool.

On the Pratt & Whitney automatic screw machines the standard outer diameters of circular forming cutters are as follows:

No. 0 machine, 1¾-inch O. D. cutter.

No. 1 machine, 2-inch O. D. cutter.

No. 2 machine, 2⅛-inch O. D. cutter.

No. 3 machine, 3-inch O. D. cutter.

In order to obtain suitable peripheral clearance the practice is to locate the center of the cutter above the center of the work as at *C*, Fig. 162; the tool holder being bored out above the center as indicated and the forming tool milled out below center a corresponding amount

Digitized by Google

so that its flat cutting surface is level with the center of the work. A very satisfactory amount to locate the circular tools above center and cut their working edges below for the machines just referred to is as follows: For No. 0 machine, 1/8 inch; No. 1, 3/16 inch; No. 2, 3/16 inch; No. 3, 3/16 inch.

GETTING THE TOOL DIAMETERS AT DIFFERENT POINTS

In order to produce a circular or a dovetail type of tool so that the contour of its cutting edge is such as to produce correct work, the amount a circular tool is off center as *C* in Fig. 162 and the clearance angle of a dove tail tool as at *D*, Fig. 159, must be known.

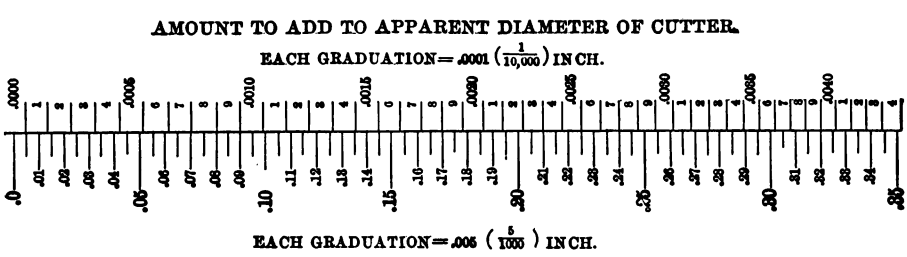

FIG. 163.—Diagram for finding actual diameter of circular forming tools for P. & W. No. 0 Automatic.

In connection with the circular type of tool the diagrams Figs. 163, 164, 165 and 166 will be found convenient for quickly ascertaining the diameters of the various sections of the tool. The method of using these diagrams is given in Fig. 164.

Where different diameters than those given in the diagrams are used, or when the amount the cutter center is set off from the work center varies from the diagrams, the following formula may be used in connection with Figs. 167 and 168:

$$f = g - \sqrt{g^2 + a^2 - (2a\sqrt{g^2 - c^2})}$$

To compute the measurement T on dovetail tools, Figs. 167 and 168, the formula would be:

$$T = a \text{ (cosine } A\text{)}$$

Ten degrees is a very common clearance for dovetail tools; cosine $10° = 0.98481$.

Digitized by Google

NO. 1 AUTOMATIC FORMING TOOLS 2″ OUTSIDE DIA. CUTTING EDGE $\frac{3}{16}$″ BELOW CENTER.

AMOUNT TO ADD TO APPARENT DIAMETER OF CUTTER.

EACH GRADUATION = .0001 ($\frac{1}{10,000}$) INCH

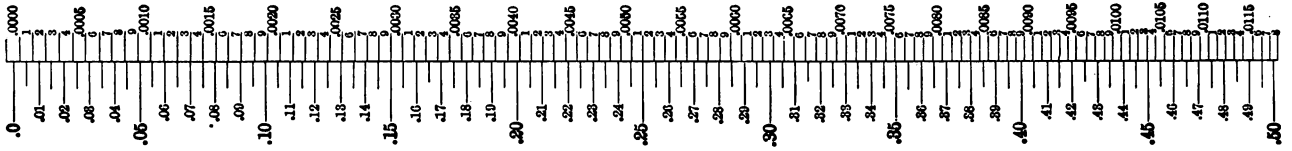

EACH GRADUATION = .005 ($\frac{5}{1000}$) INCH.

DIFFERENCE IN DIAMETER OF SAMPLE.

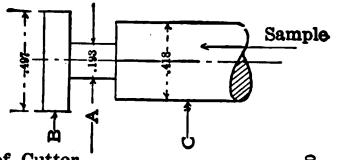

Example: to find the Actual Diameter of Circular Forming Tool at B for #1 Auto. Screw Machine.

Diameter at A = Standard Outside Diameter of Forming Tool = 2.00″

Difference in Diameter of Sample = .497 − .193 = .304. Apparent Diameter of Cutter, or Diameter if Cutting Edge were on Radial Line = 2.00 − .304 = 1.696.

Opposite .304 (Difference in Diameter of Sample) on Lower Scale Read on Upper Scale the Amount to be Added to Apparent Diameter = .0064.

Therefore Actual Diameter of Circular Forming Tool at B = Apparent Diam. (1.696) + .0064 = 1.7024.

Example; —

To Find Actual Diam. of Forming Tool at C

.418 Diam. Sample at C
.193 " " " A
.225 Dif. in Diam. of Sample

2.000 Diam. Tool at A
.225 Dif. in Diam. of Sample
1.775 Apparent Diam. of Tool
.0046 Amt. to Add (from Scale)
1.7796 Actual Diam. of Tool at C

FIG. 164.—Diagram for Finding Actual Diameters of Circular Forming Tools for P. & W. No. 1 Automatic.

Digitized by Google

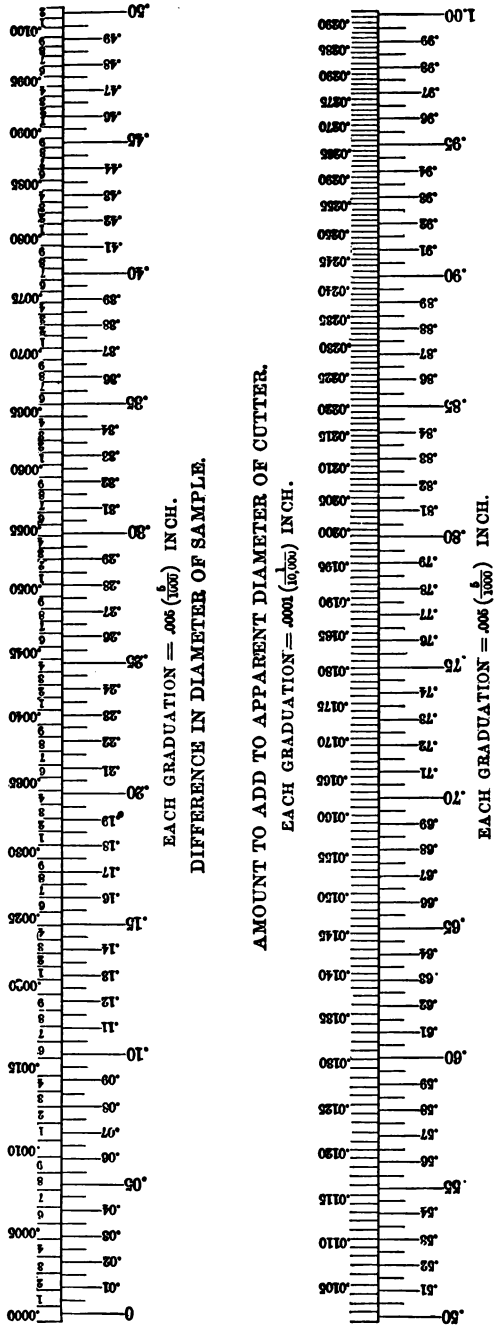

FIG. 165.—Diagram for finding actual diameters of circular forming tools for P. & W. No. 2 automatic.

Digitized by Google

NO. 8 AUTOMATIC FORMING TOOLS 3" OUTSIDE DIA. CUTTING EDGE 5/16" BELOW CENTER.

AMOUNT TO ADD TO APPARENT DIAMETER OF CUTTER.

EACH GRADUATION = .0001 ($\frac{1}{10,000}$) INCH

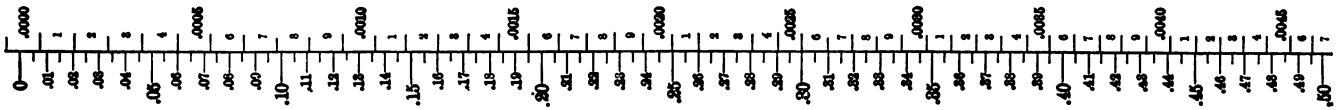

EACH GRADUATION = .005 ($\frac{5}{1000}$) INCH.

DIFFERENCE IN DIAMETER OF SAMPLE.

AMOUNT TO ADD TO APPARENT DIAMETER OF CUTTER

EACH GRADUATION = .0001 ($\frac{1}{10,000}$) INCH

EACH GRADUATION = .005 ($\frac{5}{1000}$) INCH.

DIFFERENCE IN DIAMETER OF SAMPLE.

AMOUNT TO ADD TO APPARENT DIAMETER OF CUTTER.

EACH GRADUATION = .0001 ($\frac{1}{10,000}$) INCH

EACH GRADUATION = .005 ($\frac{5}{1000}$) INCH.

DIFFERENCE IN DIAMETER OF SAMPLE.

FIG. 166.—Diagram for finding actual diameters of circular forming tools for P. & W. No. 3 automatic.

Digitized by Google

TOOL-MAKING METHODS

There are various methods employed by the toolmaker in accurately making circular and dovetail forming tools. The form of tool has considerable to do with the scheme selected. For instance, if the work is entirely without curved or irregular outline the tool, if circular, would be simply turned up in an engine lathe to the correct dimensions, sometimes making allowance for grinding, and then milling out a section for the cutting edge. In case the cutter in question is of the dovetail form and has been correctly dimensioned, no difficulty

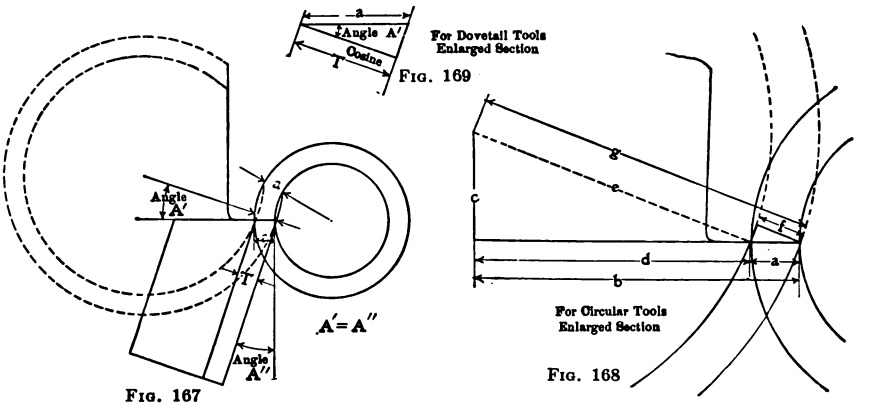

Fig. 169

Fig. 167

Fig. 168

Figs. 167–169.—Finding cutting depths of forming tools.

will be experienced in accurately planing to dimensions if the toolmaker has proper dimensioned size blocks. The depth micrometer also is of value in this work. Sometimes fly cutters are also used for making these dovetail tools.

THE TRANSFER SCHEME

It sometimes happens that circular cutters are to be made which are very difficult to caliper; it is then quite frequently advisable to turn a tool-setting gage of the correct diameter and copper plate the gage (using blue vitriol), and then to size the cutter correctly by first bringing a master tool into contact with the gage, noting the graduation on the micrometer collar on the feed screw of the lathe, then moving the carriage longitudinally and bringing the master tool down upon the cutter to the same position. This scheme admits of several master tools being used, and in connection with micrometer stops or suitable size blocks for the longitudinal movement of the carriage accurate circular tools can be economically made.

Digitized by Google

Fig. 170 illustrates this transfer scheme, corresponding numbers indicating corresponding diameters of model and cutter. By simultaneously using a fixed dead tool arranged as a stop on center against

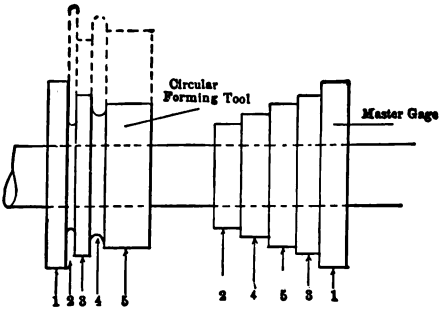

FIG. 170

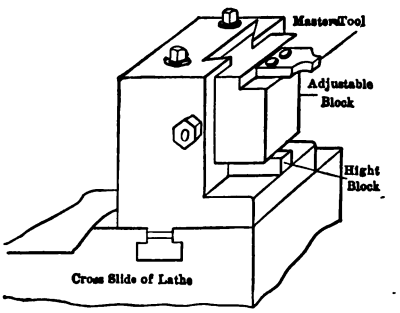

FIG. 171

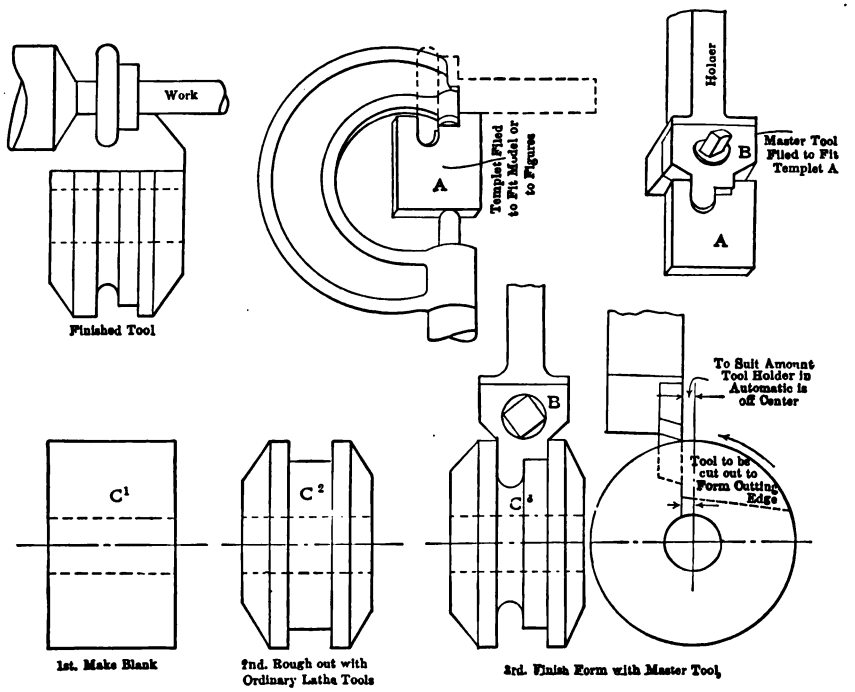

FIG. 172

FIGS. 170–172.—Making circular forming tools.

the gage before referred to and a master tool off center the amount the circular cutter is off from the work-center, the gage may be made of such diameters as would be correct with the cutting edges of the circular cutter on the radial line instead of being off center. Another

Digitized by Google

modification of the scheme is to dispense with the dead tool or stop referred to and use a rigid master-tool-holding block capable of rapid vertical adjustment which will permit of setting the master tools to the gage while on center and then allow them to be dropped below center an amount equal to the amount the cutting edge of the cutter is off center. This permits very accurate cutters to be produced. Fig. 171 will give an idea of this method.

Sometimes it is found convenient first to rough out the circular forming tool and next mill out the space for the cutting edge, and thus permit the master tool to be used without the chance of error creeping in which might occur on account of the necessity of moving the cross slide of the carriage in and out.

It will be found of advantage to use tissue-paper feelers between the master gages and the tools in these transfer methods. Some toolmakers prefer merely copper plating the master and just burnishing the copper surface to show contact previous to transferring.

MASTER TOOLS AND TEMPLETS

When irregular shaped circular forming tools are produced by direct micrometer measurements, the master tool is generally made of the same contour as the work that is to be produced; consequently the master tool when finishing the circular tool must be held off center an amount equal to the amount the cutting edge of the circular tool is off center. The sequence of operations in making a circular tool from a given model or drawing is shown in Fig. 172. First is prepared a master tool templet *A*, and then a master tool *B*. The templet is of sheet steel and should be made from a rectangular piece that is perfectly square to facilitate measuring with a micrometer. Considerable skill is required to file complicated forms accurately. The master tool *B* is shaped exactly to fit the master tool templet *A*, and is also made perfectly square to permit measuring with a micrometer.

The circular tool is formed by the latter as previously outlined and as shown in Fig. 172. Owing to the thin scraping chips taken when finishing a cutter to exact size the master tool may have a tendency to glaze instead of cutting. The use of turpentine prevents the glazing by assisting the tool to take hold on very thin chips. In some cases two or more master tools are found more convenient than the one, especially in making wide circular forming tools, and in this event it is customary to make a male sheet-steel gage *D*, Fig. 173, for convenience in testing the longitudinal positions of the various cuts in the circular tool. This latter gage does not require the complete form as it is commonly used for longitudinal work only.

Digitized by Google

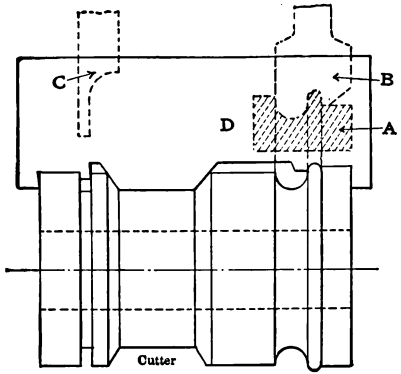

A Templet made to Model
B Master Tool made to Templet A
C Tool for Cutting Groove
D Templet for Longitudinal Location of the Various Impressions in the Forming Tool

FIG. 173

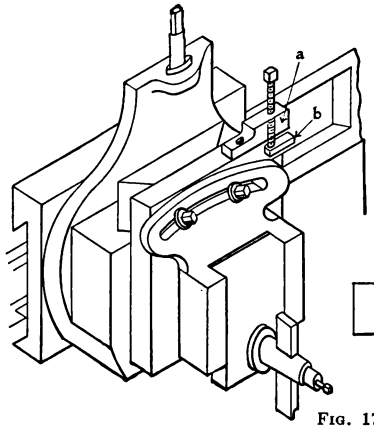

FIG. 174

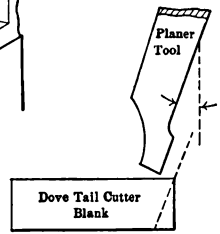

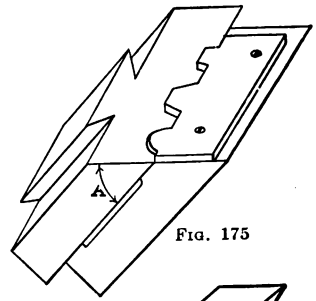

FIG. 175

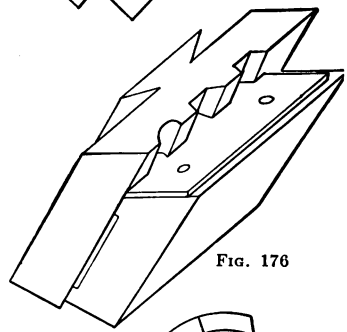

FIG. 176

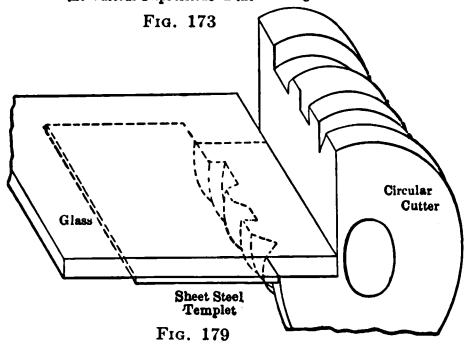

FIG. 179

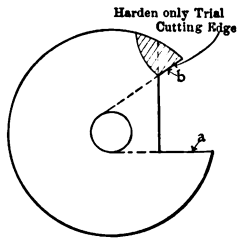

FIG. 177

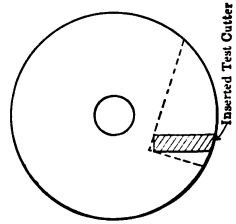

FIG. 178

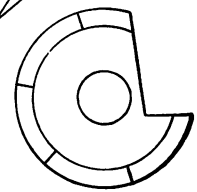

FIG. 180

FIGS. 173–180.—Making circular and dovetail forming tools.

Digitized by Google

MAKING DOVETAIL TOOLS

In planing dovetail tools size blocks may be used as already mentioned for setting the planer or shaper tool to the various heights required. A stop screw may be located as at *a*, Fig. 174, and size blocks used as at *b* for regulating the setting of the head. Or a depth micrometer may be used instead of the stop screw, tissue-paper feelers being used in either case. Size blocks may also be used directly on the plate in many cases, the tool being brought down into contact with the different blocks for getting the depths of the various grooves, etc., in the cutter blank.

In using a formed tool of same contour as the model in planing the dovetail tool as in the enlarged sketch in Fig. 174, the formed tool is held in the post at the same angle as the dovetail tool will afterward be used on the work. The dotted lines indicate the angle to which the working edge will be finished and the planing tool is shown set at the same angle.

In planing the dovetail form of tools it will sometimes be found of advantage to plane the face of the cutting edge of the blank to the correct angular relation to the clearance face as at *A*, Fig. 175, and then scribe the contour desired on this cutting face from a templet.

If the templet is fastened to a block as shown, the shape of the finished soft cutter may also be nicely tested as in Fig. 179.

As frequent hardening and annealing of tool steel is liable to affect its quality, various expedients are resorted to in order to test the correctness of tools without undue waste.

TESTING OUTLINE OF FORMING TOOLS

A common scheme is to mill the circular tool as in Fig. 177, where *a* is the actual cutting edge and *b* a trial cutting edge. The cutter is hardened at *b* only and a piece of work is formed by this edge. If incorrect, the cutter edge is annealed at that point and then corrected. Another method is to insert a flat piece of steel as in Fig. 178, and after forming, the test piece is removed and hardened to test the accuracy of the form in the cutter.

A glass plate is frequently found convenient when testing the outline of a circular tool with a templet, the sketch, Fig. 179, showing the application clearly.

Narrow circular cutting-off tools and in fact almost all delicate circular forming tools which are apt to be cracked by hardening are benefited by having radial slots milled as shown in Fig. 180; they are then less liable to crack than when left solid.

Digitized by Google

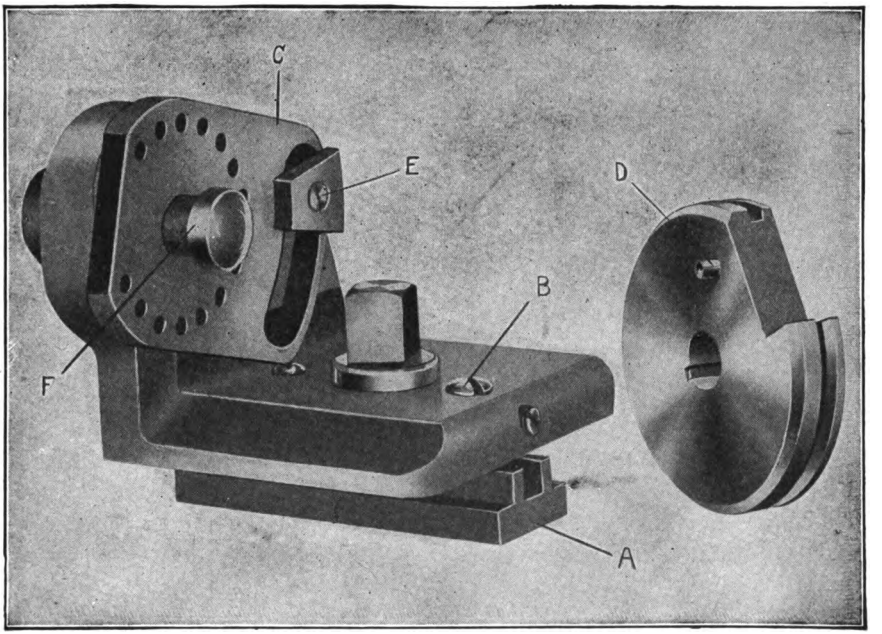

FIG. 181.—Adjustable tool post for circular forming tools.

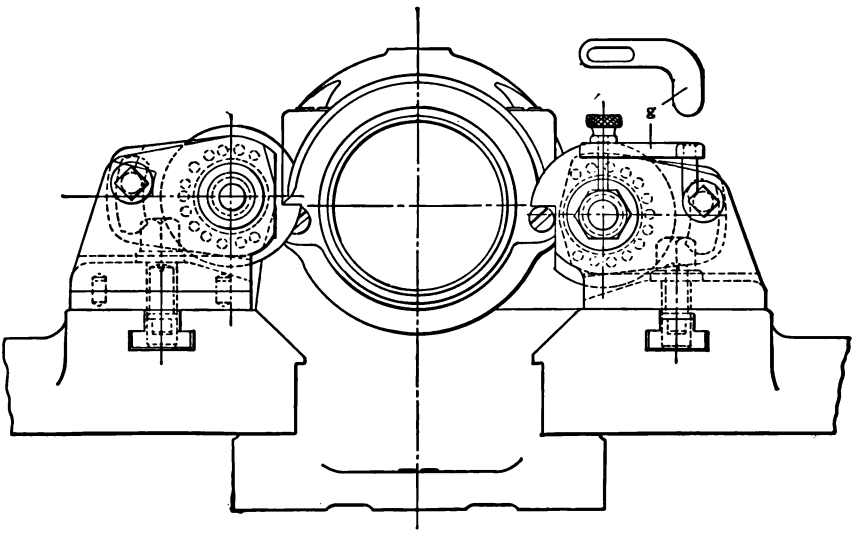

FIG. 182.—Adjustable tool posts for circular forming tools.

Digitized by Google

TOOL POSTS

There are many types of tool posts for holding cross-forming and cutting-off tools. Fig. 181 is a form of post made by the Pratt &

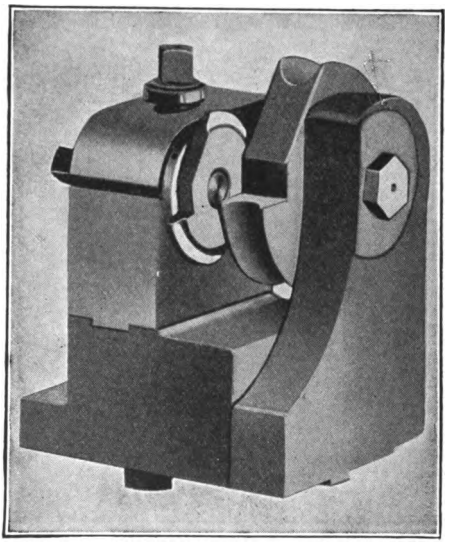

FIG. 183.—Tool posts for two circular tools.

Whitney Company for holding circular forming tools. This has an adjustable swivel tongue or guide *A* which is controlled by an eccentric pin *B*. The cutter is doweled to the tool holder *C* by pin *D* and the

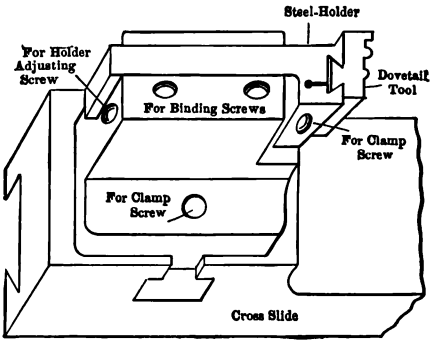

FIG. 184.—Post for dovetail tool holder.

holder after the cutter has been brought into correct position is firmly clamped to the tool post. There are a number of holes in the tool holder *C* which permit the cutter to be doweled until entirely

Digitized by Google

worn out. The holder is clamped by screw *E*, and being considerably further from the center of the cutter than the cutting edge insures rigidity in this respect. The cutter and holder furthermore are clamped by the center tool binder *F*. A gage for quickly locating

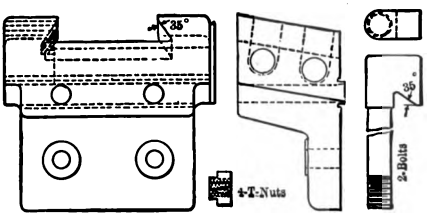

FIG. 185.—Dovetail forming tool post.

the cutter edge on center is part of this equipment. Fig. 182 illustrates a pair of these posts in position and a gage is shown at *g* in the drawing.

Fig. 183 illustrates a circular forming-tool holder with two varying diameters of tools which has been used on automatics equipped with magazines for cast-iron sewing-machine hand wheels and similar work where considerable variation in diameters would require a very large

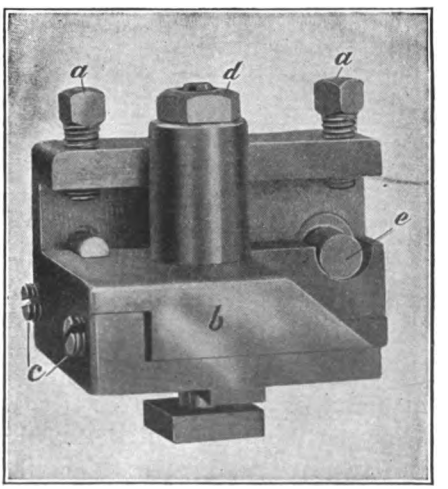

FIG. 186.—Post for straight cut-off and forming tools.

circular tool of the ordinary type, which would be unsatisfactory as regards peripheral clearances.

Fig. 184 is a common dovetail tool holder and post. Fig. 185 represents another style of tool post for holding the dovetail type of tool. Fig. 186 shows a tool post for holding flat tools. The tool

Digitized by Google

is clamped by screws *a* in swinging block *b* which is adjusted by screws *c* and clamped fast with the tool post to the cross slide by nut *d*. An eccentric pin *e*, adjusts the tool to position vertically, and the swinging block gives the required adjustment for side clearance.

There are numerous other types, where provision is made for adjusting the tool vertically by wedges, swinging anvils, etc. Fig. 187 illustrates one of these posts with swinging anvil.

APPLICATION OF TOOLS TO WORK

Generally, circular dovetail-forming tools do not have perfect side clearance. This feature is discussed in Chap. XVI on "Why Chips Cling to Screw Machine Tools."

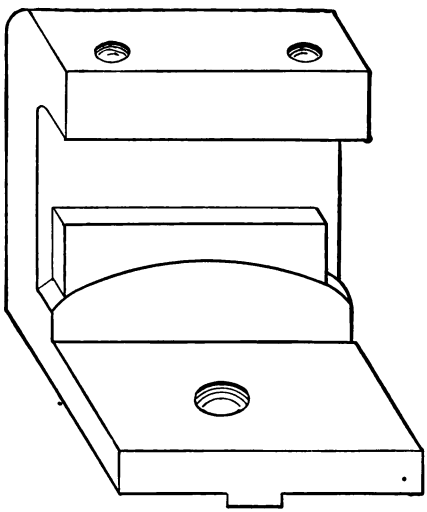

FIG. 187.—Tool post with adjustable shoe.

One point that should be carefully considered in the use of cross-forming tools is whether it is most desirable to use a tool with the forward or reverse movement of the spindle. This is of particular importance when the forward and reverse speeds are greatly at variance, which is generally the case, as the production per hour may be greatly increased or decreased according to these conditions. The question as to whether a cross-feeding tool is to be in cutting action simultaneously with an opposite cross-feeding tool, or with a tool in the turret, is also to be considered in this connection.

Fig. 188 illustrates a variety of work which is common to the automatic screw machine and shows various arrangements of forming

Digitized by Google

tools, several of which are adapted for simultaneous operations of front and rear tools which many times is conducive to a high rate of production as the cuts taken with each tool may be greater than if either were operating alone as the side pressure on the work is balanced. When the construction of the machine does not permit of the simultaneous cutting action, a similar arrangement of tools is satisfactory; only the time and sequence of their operations must be taken into consideration.

FORMING AND TURNING

There are a number of important details regarding the shape and method of using forming tools some of which will now be touched upon: Sketches A, A^1, A^2, Fig. 188, indicate a method of forming and cutting off a piece with two tools, one of which is, of course, fed into the work before the other. The burrs indicated by arrow points at A^2 are due to the rubbing of the forming tools on the side cuts, and unless there is perfect side clearance to the forming tool, the burr will be increased. By adding a bevel edge to the tool, as shown by A, the burr produced is removed. A^1 is a refinement over A. At B is illustrated a common method of simultaneously cutting off and forming shoulder screws, the two tools finishing their cuts at the same time. Where a machine with single cross slide is used for producing work in this fashion, the cutting-off tool should precede the forming tool as the bar then has its full diameter and strength for the cutting-off operation. Sketches C to C^5 show an ordinary screw in which the head is to be formed by cross-slide tools and the body turned by a box tool or hollow mill in the turret. The cross-slide tools start their cuts together, but the forming tool for the head, of course, has to finish first. The cutting-off tool should be made so as to bevel the end of the bar as shown, in order to permit the starting of the box tool on a light cut until its back rest has a good support.

The forming cutter for the head should be beveled as at c in C^1 in case the box tool follows the forming cut. This allows the tool to cut into the stock as at C^2, leaving a beveled shoulder so that when the box tool is fed along it completely removes the superfluous metal without leaving an objectionable ring which is quite apt to be produced under the conditions represented in C^4 and C^5. The ring of metal there seen, which is a result of the square shoulder cut by the forming tool in C^4, is quite apt to tip over on the screw blank and cramp and to later on prevent the die from cutting the thread properly.

Digitized by Google

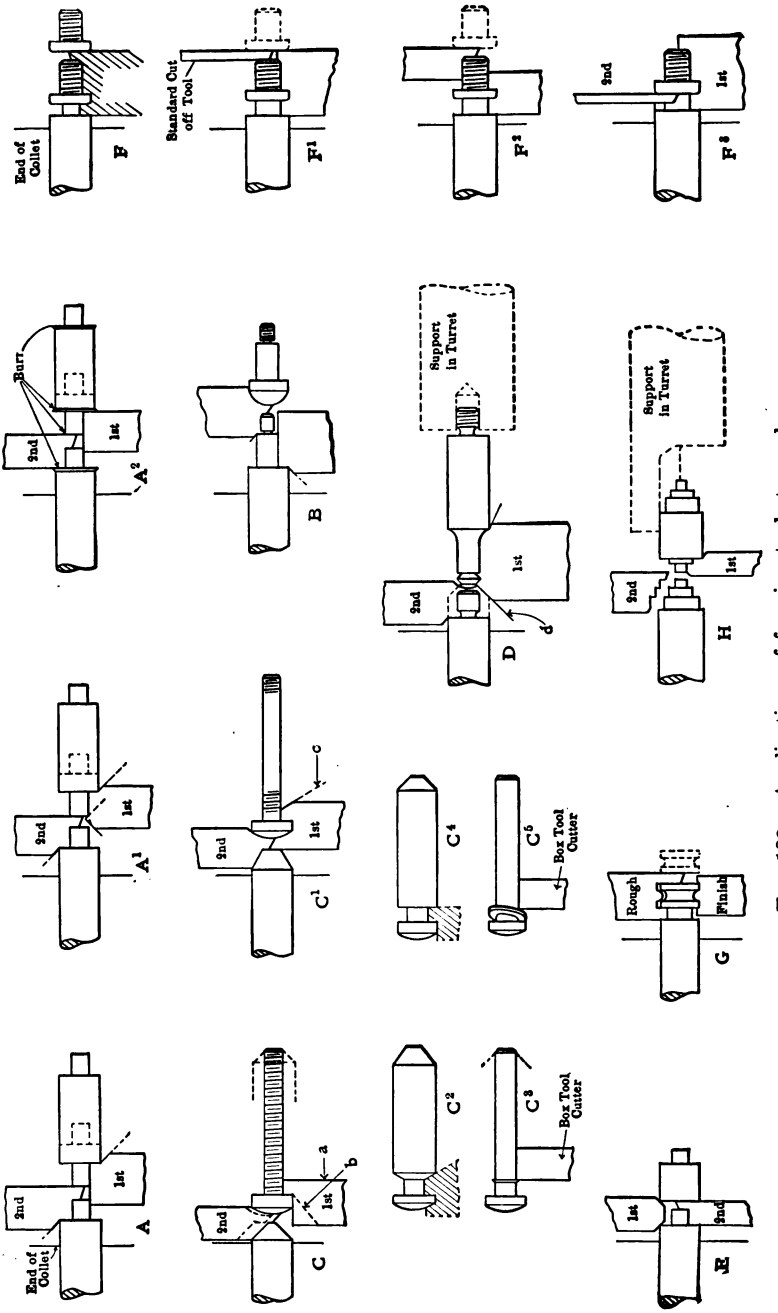

FIG. 188.—Applications of forming tools to work.

Digitized by Google

SUPPORTING LONG WORK

At *D* is illustrated a method of forming and cutting off long pieces where it is generally advisable to use a supporting device as indicated. It is obvious that the two cross-slide tools are not used simultaneously in this case. The bevel at *D* left by the first tool prevents the work breaking off prematurely. *E* is a very simple piece to produce. Where there are double slides on the machine the two tools may start their cuts at the same time, but the rear tool, of course, merely chamfers the edges of the work. This bevel cutter is a refinement not always required, but it is desirable when the burr which would be produced by the front tool is objectionable.

MAKING SHORT SCREWS AND OTHER PARTS

At *F*, F^1, F^2 and F^3 are shown several methods of forming and cutting off short screws. The method at *F* is a rapid one and is

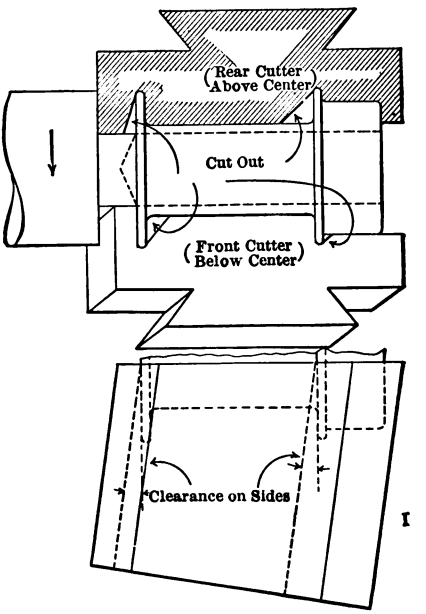

FIG. 189.—Forming with a pair of dovetail tools.

particularly recommended for machines with one cross slide, the cutting off of the finished screw being accomplished at the same time the forming of a new blank is being done and requiring a traverse movement of only about one-half the radius of the work. F^1 and F^2 are applicable only to a machine with double cross slides in case

Digitized by Google

simultaneous cutting action is desired. These two methods are rapid, both tools finishing their cuts at the same time. F^2 requires a more costly tool outfit, but on account of balancing the cut is preferred where coarse feeds are taken or long work is to be formed. The method of producing short screws indicated in F^3 makes use of a rear cutting-off tool after the forming tool has completed its work.

G illustrates a scheme which is of value where roughing and finishing cuts are required on exceedingly accurate work. The roughing tool cuts off the piece previously formed and leaves a light cut for the finishing tool to take on the work outlined. *H* is self-explanatory, indicating the value of the turret support for the work.

A PAIR OF DOVETAIL TOOLS

A method is shown in Fig. 189 for getting perfect side clearance in dovetail-forming tools. The front tool is used for finishing the left-hand sides of the work flanges and the rear tool for finishing the right-hand sides and the end, the tools being inclined in opposite direction so as to obtain clearance for these cuts. The tools are cut out as indicated by the arrows, at diagonally opposite points so that each cutter will clear the surfaces finished by the cutter opposite. Similarly, side clearance to circular tools is possible by inclining their axes.

ARRANGEMENT OF CIRCULAR TOOLS

In Fig. 190, sketches *J*, *K*, *L*, *M* show various ways of arranging forming tools with reference to the direction of rotation of the spindle. These are to be considered as being viewed from the turret, looking toward the head spindle. The arrangement at *J* is a most common one when a spring screw die or a tap is to be used. The low-speed forward drive of the spindle is used for the cross forming of the work (as at C-C^1, F-F^3, Fig. 188), while the high reverse speed is utilized for removing the die or tap and for light cutting-off cuts like that at F^2. At *K* is a similar arrangement to *J*, and in some cases this is substituted for the former, particularly where the die or tap has a left-hand thread; the cutting-off tool is used at the front and the heavier forming cuts taken from the rear in this event.

L and *M* show arrangements of tools where they operate simultaneously or where there is no necessity for reversing the direction of rotation of the head spindle. In this latter case the spindle speeds generally differ, and by carefully selecting the proper speeds a high rate of production will be possible. In all cross-forming work it is essential that the spindle fit snugly in its front bearing and that the

Digitized by Google

collet or chuck has a good parallel contact with the bar which is being formed. A bell-mouthed collet is most frequently the cause of chattering, although excessive clearance may also promote chattering.

The tool holder should be of such design as to hold the tool firmly and the cross slide of such dimensions and so gibbed as to permit

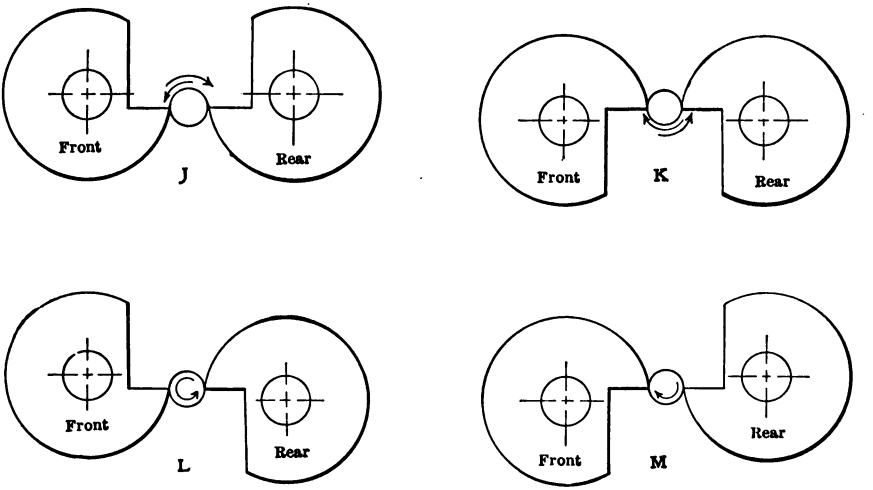

FIG. 190.—Forming tool positions.

of no spring or shake. With careful attention to these details and providing the cuts are supported from the turret when they are wide, and also providing the design of the tool and the question of clearances are carefully considered, excellent results should be obtained.

The rates of feed and the subject of lubricants are discussed in other chapters of this book. Obviously speeds, feeds, and lubrication all have an important bearing on results obtained in the automatic.

Digitized by Google

CHAPTER XV

NURLING TOOLS AND THEIR APPLICATIONS

Nurling in the screw machine may be accomplished in several ways. The softer materials such as *rod-brass*, etc., due to the greater mobility of the metal, permit of deeper and coarser pitch nurling than the harder and more brittle metals.

OPERATION OF THE NURL

Generally speaking, the nurling tool which is a hardened tool steel roll, with impressions on its periphery the reverse of those desired on the work, is allowed to rotate freely when brought into contact with the blank that is to be nurled. In some instances, however, long, fancy impressions, numbers or letters are to be nurled upon blanks, and in this event precise results are insured by coupling the nurl to the work spindle by gearing, so as to revolve it positively at a correct uniform speed.

In addition to producing fancy corrugations by nurling, short threads are successfully rolled in. In typewriter manufacturing establishments it is common practice to burnish short sections of studs and shoulder screws to size by passing across the work two cylindrical hardened and ground rolls, which are separated to give the exact diameter desired.

METHODS OF NURLING

Referring now to the more common nurling operations, there are three methods to consider.

Method *A*. Nurling from the turret by use of a holder carrying two or more narrow nurls which may be adjusted radially to suit the work. These nurls are *passed longitudinally over* the work. Figs. 191 and 192 illustrate two types of these tools.

Method *B*. Nurling from the cross slide by use of a holder carrying one or two nurls, and forcing the nurl *radially into* the work. This is illustrated at *a* and *b*, Fig. 193.

Method *C*. Nurling from the cross slide by means of a holder carrying a nurl, so as to *pass tangently across* the work. Fig. 194

Digitized by Google

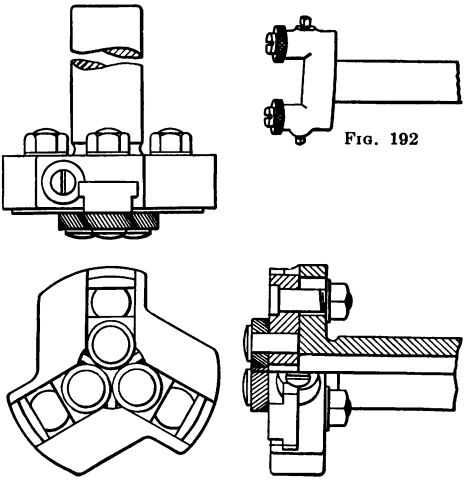

FIG. 191

FIG. 192

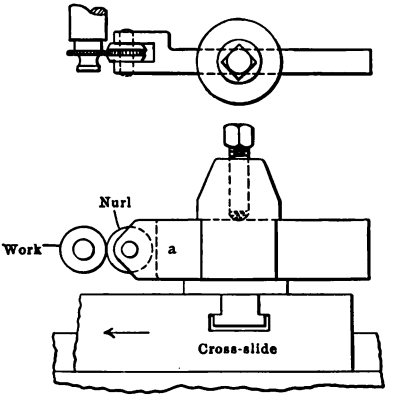

FIG. 193

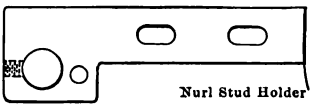

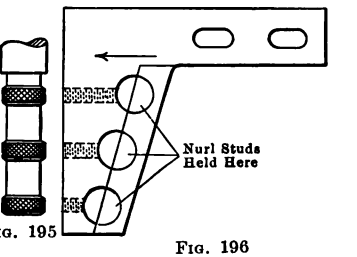

FIG. 195

FIG. 196

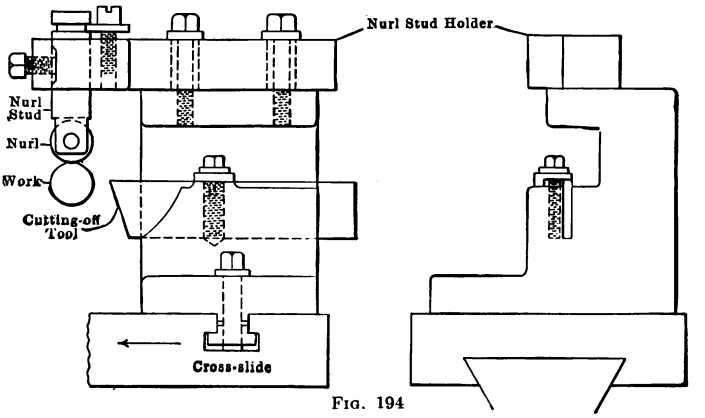

FIG. 194

FIGS. 191–196.—Nurling tools.

Digitized by Google

illustrates this type of holder in combination with a cutting-off tool, the nurling operation being accomplished first and the cutting-off following.

APPLICATIONS OF DIFFERENT METHODS

Method *A*, owing to the absence of any side pressure, is recommended for all cylindrical nurling operations when the length of the desired impression is greater than its diameter. In fact many operators use this method for all straight work. On complicated work where all the turret holes are required for the various cutting tools, it sometimes becomes necessary to use holders, which, in addition to holding the nurling tools, are so arranged as to hold an internal cutting tool such as a drill or counterbore. The holder must be stiff so as to hold the nurls to the work firmly without spring.

Method *B* is recommended only for narrow nurling on soft metals close to the end of the head spindle. On hard materials or on wide work, the excessive pressure required to force the nurl into the work is apt to crowd the work away and produce poor results.

Method *C* is a satisfactory means of nurling work up to a length equal to its diameter, providing the nurling is close to the end of the head spindle. The pressure required to force the nurl into the work is much less than by method *B*. These last two methods permit of all the turret holes being utilized for other operations, and as shown by Fig. 194, method *C* permits of the combining of the nurling and cutting-off operations in one holder. Method *C* may be satisfactorily used for nurling work as in Fig. 195, having several narrow steps, by arranging the holders to carry three nurl studs as indicated by Fig. 196. The nurls cut one after the other, and thus prevent undue pressure due to simultaneous action upon the work.

END NURLING AND BURNISHING

In addition to nurling upon the periphery of work, quite frequently end nurling as in Fig. 197 is required. This is satisfactorily accomplished by means of a turret nurl holder carrying a bevel nurl at a siutable angular relation to the work as shown in Fig. 198.

The method of applying burnishing rolls to short studs, screws, etc., as referred to in connection with the manufacture of typewriter parts, is illustrated in Fig. 199.

In this chapter the aim has been simply to outline the various methods and to point out where they might be successfully used, therefore no detailed description of the various types or bolders or of methods of making nurls is given.

Digitized by Google

RESULTS OBTAINED

All of the methods described when used on work for which they are recommended should give excellent results, providing the nurling of too heavy impressions for the character of the material is not attempted, and also providing the work is turned to proper circum-

FIG. 197

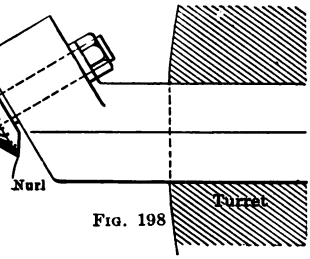

FIG. 198

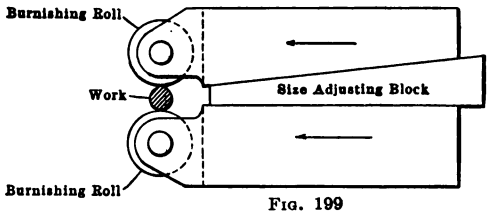

FIG. 199

FIGS. 197–199.—Nurling and burnishing tools.

ferential dimensions so as to mesh well with the pitch of the nurling tool without irregular spacing at the end of each revolution. A slight variation in the diameter of the blank oftentimes results in a marked improvement in the appearance of the piece when nurled, especially on coarse pitch work.

A liberal supply of lubricant should be used on the work and unnecessarily high speeds avoided.

Digitized by Google

CHAPTER XVI

WHY CHIPS CLING TO SCREW MACHINE TOOLS

Clinging of chips to the cutting edges of tools used in the screw machine or under similar conditions is due largely to the heating of the chip or of the cutting edge of the tool, or both, to such an extent as to cause the chip to become "welded" to the tool.

This heating may be caused by: (1) Lack of sufficient angular clearance between tool and work; (2) too high cutting speed and consequent dulling of cutting edge of tool; (3) insufficient and improper cooling or lubricating material; (4) incorrect rake of cutting edge of tool; (5) lack of chip room; (6) too much non-cutting tool surface in contact with work.

CLEARANCE

Referring to the matter of angular clearance, Fig. 200 gives an idea of desirable conditions for a cutting-off tool, while Fig. 201 illustrates undesirable conditions. The slight flat at *a*, Fig. 200, is to insure smoothness of the work. In case circular tools are used in the ordinary manner to cut down a form, as in Fig. 202, there is no clearance at the outer edge of the cutter at *b*. By swinging the center slightly, as shown in Fig. 203, so that the axis of the cutter is not parallel with the axis of the material being worked, perfect clearance may be obtained. When one tool is used for cutting both sides of a narrow slot, as in Fig. 204, a rectangular form of tool is generally recommended, as complete clearance can be obtained. This form of tool has a relatively short life as compared with the circular type of tool, and consequently the latter with its partial clearance, as shown in Fig. 205, is commonly used. In cases where it is not subjected to severe duty as regards cutting speed, good results are obtained. When the width of the slot is not important, each side of the tool may be finished spirally, giving excellent clearance conditions, as illustrated by Fig. 206. The clearance should be ample to avoid undue contact with the work, but on the other hand not be so much as to produce a thin cutting edge, as the latter will quickly heat under working conditions and then,

Digitized by Google

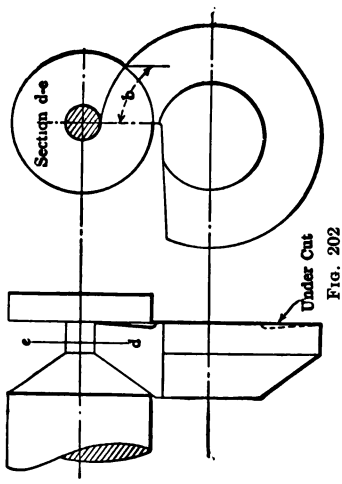

Fig. 202

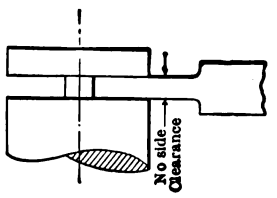

Fig. 201

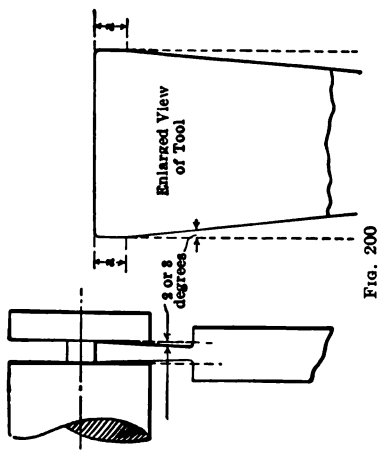

Fig. 200

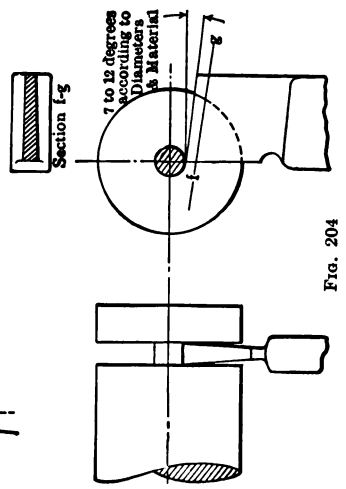

Fig. 204

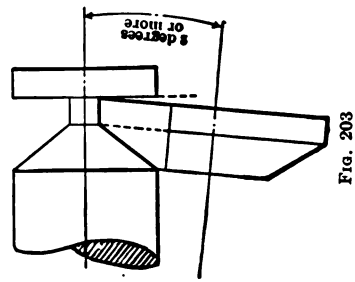

Fig. 203

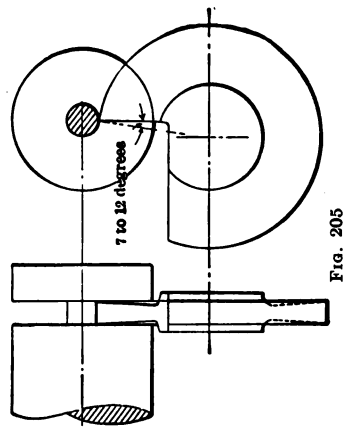

Fig. 205

Figs. 200–205.—Cutting action of various types of screw machine tools.

Digitized by Google

becoming soft, will rapidly become unfit for use. Furthermore, chattering may result from too much clearance, as indicated at *A*, Fig. 209.

It should be obvious that internal cutting tools require clearance as well as external tools; in the former case not only the cutting lip, but the outer diameters require back clearance, as represented in Fig. 207.

CUTTING SPEEDS

It is conceded that there is a limit to the cutting speed on account of the edge of the tool giving out when an exceedingly high speed is attempted. There is also a limit due to the heating of the chip so as to cause it to weld to the tool. Apparently the material being worked has considerable to do with this trouble; experience shows that soft low-carbon steel and brass and similar materials will cause the most trouble, as the welding process occurs before a speed destructive to the cutting edge has been reached. On harder material, *i.e.*, cast iron or steel with more carbon, the welding is not as troublesome.

COOLING AND LUBRICATING MATERIALS

In many shops "good lard oil" is the standard prescription for use in connection with external and internal cutting operations on cylindrical work. The advantages of oil are fully appreciated when the element of friction plays an important part—for instance, in cutting threads with dies or taps, and in some other internal cuts—but successful results have often been obtained when absolute failure seemed apparent by substituting a cooling material composed largely of water in place of the oil.

Oil positively will not conduct away the heat generated by high cutting speeds and feeds as rapidly as many of the numerous cooling materials on the market. Oil, as compared with the thinner liquids, is sluggish in penetrating to the point where the chip is being torn from the work.

For internal work a compromise, or in some cases the clear oil, is more desirable on account of the fact that the tools do not generally have as perfect a clearance.

RAKE

In case of the tool having negative rake, as at *C*, Fig. 208, the chip will be pushed off instead of being clean cut and curled, as at *D*. When negative rake is carried to extremes, the chip which is being broken off may be drawn between the cutting edge of the tool and the work and

Digitized by Google

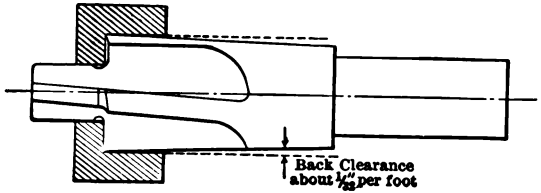

FIG. 207

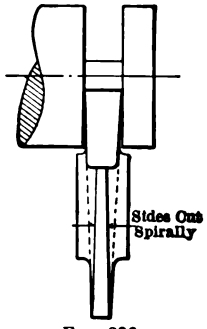

FIG. 206

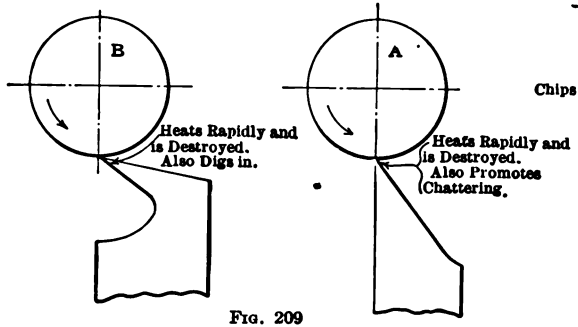

FIG. 209

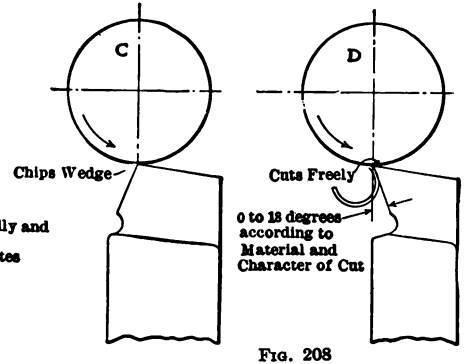

FIG. 208

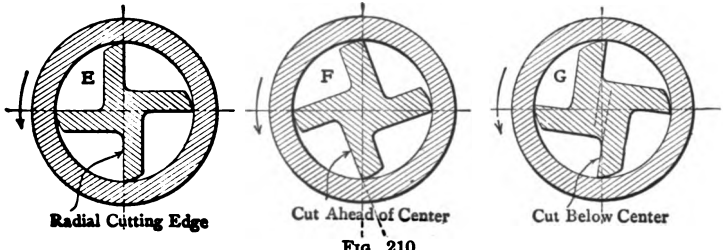

FIG. 210

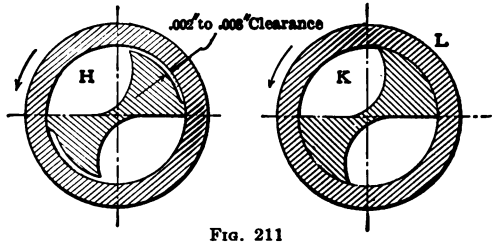

FIG. 211

FIGS. 206–211.—Cutting action of various types of screw machine tools.

Digitized by Google

thus become wedged and heated, and welding may result. The wedging action is particularly troublesome on internal work, and may frequently be overcome by changing the type of the flute in the tool.

In cases of tools having excess positive rake, as in Fig. 209, the cutting edge being so thin, rapidly heats and becomes destroyed, so that this condition must also be avoided.

Clearance and rake form quite a deep subject. The exact amount depends upon the nature of cut as well as upon the nature of the material being cut; in this chapter it is not desirable to go into the matter at any great length, as it has been treated in connection with various classes of tools in the preceding chapters of this section. The point to be emphasized in connection with the subject being treated is that the cutting edge must not be given too acute an angle.

CHIP ROOM

On internal cutting tools, when there is little chip space, the packing or wedging of chips and the resulting heat cause much trouble, particularly on brass and similar materials; increased chip space overcomes the difficulty.

The form of cutting flute influences greatly the welding action, and in some instances the spiral of the flute has an effect. Where a long chip causes trouble, a straight flute or sometimes a left-hand spiral is more satisfactory than the more common right-hand spiral.

The cutting edge should generally be radial, as at *E*, Fig. 210. In case it is ahead of the center, as at *F*, the chip is forced outward and against the work, and then may become wedged into the cutting edge. Making the cutting edge slightly below center, as at *G*, where a straight flute or right-hand spiral is used, is sometimes recommended, as the chips then automatically work toward the center of the tool, and are then forced out from the front of the hole being bored.

When wide chips cause trouble, the cutting edge may be serrated or broken and narrower chips produced.

The style of cutting edge, number of cutting edges, etc., are second only in importance to clearance and rake, and much is to be learned in this direction.

SURFACE IN CONTACT WITH WORK

The difficulty of too much non-cutting surface in contact with the work is experienced mostly with internal cutting tools and particularly in brass and bronze work. *H*, Fig. 211, illustrates a drill correctly relieved; *K*, Fig. 211, is bad. In the latter case the material being

Digitized by Google

worked becomes welded to the surface *L*, on account of the heat caused by the rubbing action of such a great amount of contacting surface.

In conclusion, while it is generally the practice to design tools to suit the material, it must not be overlooked that a slight change in the nature of the material being machined will oftentimes make possible great improvement both as to quality and quantity of work turned out.

Digitized by Google

Digitized by Google

SECTION V

BORING

CHAPTER I

BORING MACHINES AND THEIR WORK

There are two main types of boring machines, horizontal and vertical. The latter are usually called boring "mills," instead of machines. This is not universally true, however, as the horizontal type is sometimes called a "mill" as well. The safer way is to designate the kind of machine to avoid misunderstandings.

The general appearance of each type, together with the names of the principal parts, is shown in Figs. 1 and 2.

Horizontal boring machines may also be divided into two types. In one type the spindle revolves in fixed bearings as does the spindle of a lathe while the table carrying the work moves vertically with relation to it. The other, usually referred to as the Lucas type, carries the spindle in a head which has a vertical movement but the table remains at a constant level. Each has its uses and its advocates and examples of both machines at work will be illustrated, the views being obtained from different shops and showing a variety of work.

In Fig. 3 a machine of the first type is boring out a hollow spindle of some sort, the work *A*, being clamped in the brackets *BB* which are mounted on the bed *C*. This bed is not part of the machine but is merely a support for the work and for the guides *D* and *E* which hold the boring bar in position. The front end is fastened to the table of the machine while the outer end is supported on the block *F*. The bar is fed through the work by the end movement of the spindle of the machine.

Another type of job is shown in Fig. 4. In this case the work is mounted on a revolving table on top of the regular table, so as to be readily swung into any position by means of the handle *A*. The work *B* is held in the fixture *C*, which guides the boring bar at *D*, a similar guide being provided at the other end. Here the work is

Digitized by Google

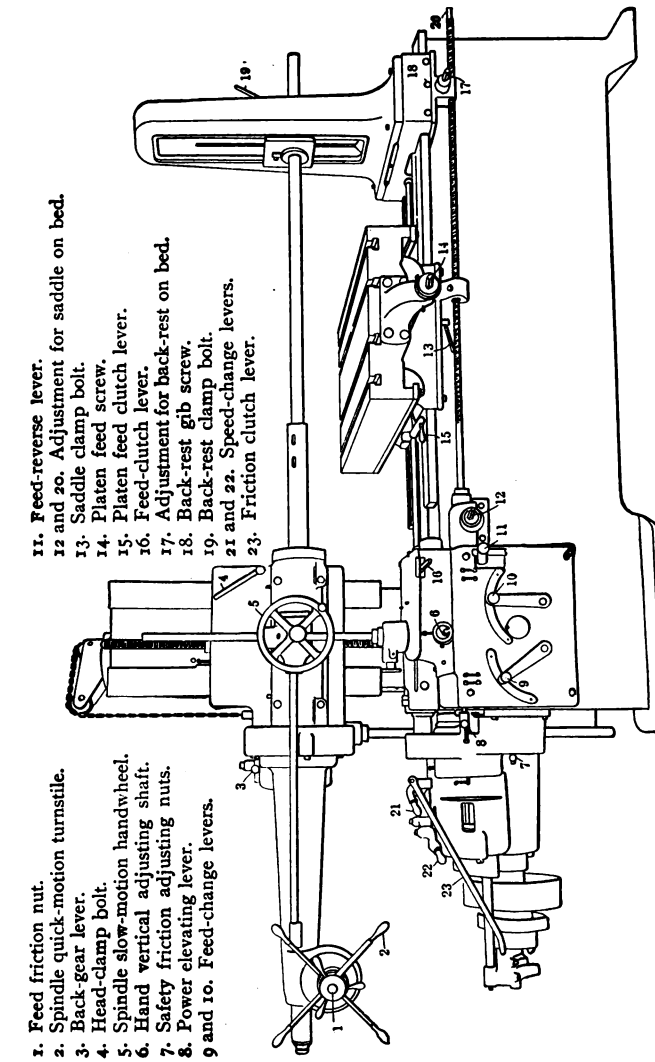

FIG. 1.—Boring machine—horizontal.

Digitized by Google

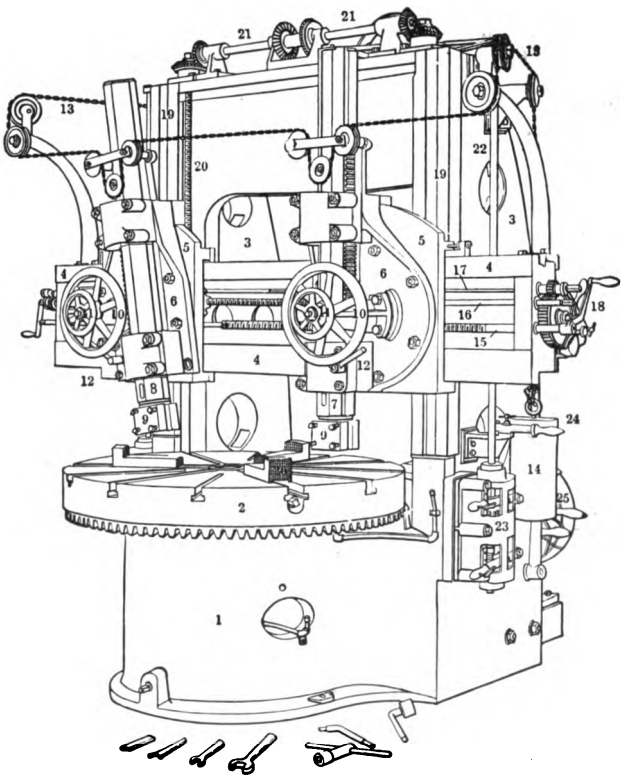

FIG. 2.—Boring mill—vertical.

1. Base.
2. Table.
3. Housing.
4. Cross-rail.
5. Saddle.
6. Swivel.
7. Right spindle.
8. Left spindle.
9. Tool heads.
10. Vertical feed wheels.
11. Power feed lock.
12. Spindle bearings.
13. Counterweight chain.
14. Counterweight.
15. Cross-feed screw.
16. Cross-feed screw.
17. Vertical feed rod.
18. Power feed gears.
19. Housing slides.
20. Vertical cross-rail screw.
21. Cross-rail hoist.
22. Vertical power rod.
23. Gear box.
24. Power control handle.
25. Driving pulleys.
26. Chuck jaws.

Digitized by Google

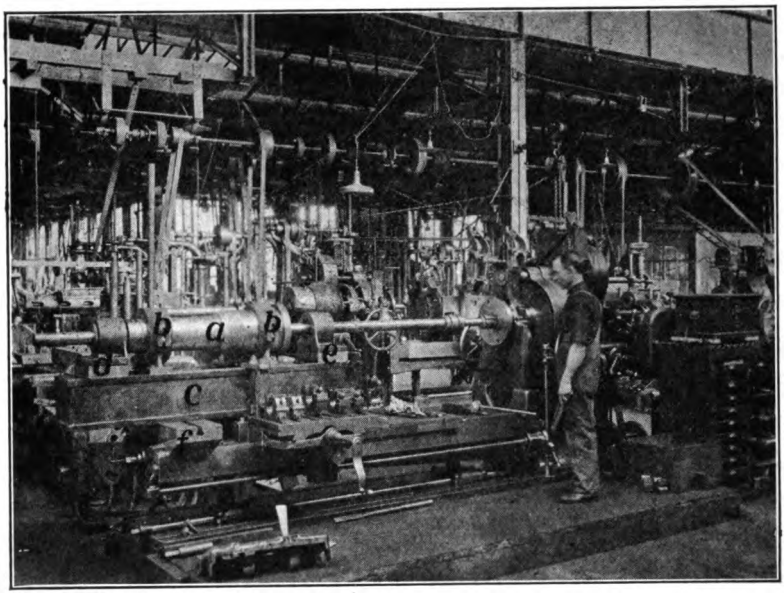

FIG. 3.—Boring a large spindle.

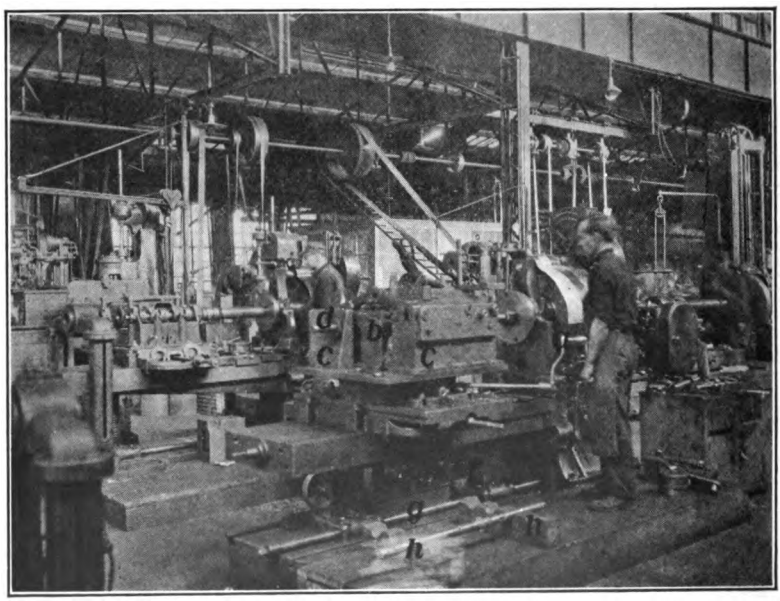

FIG. 4.—Boring in fixture on revolving table.

Digitized by Google

short and requires no extension of the bed. The table is supported by two heavy screws, *E* and *F*, which are operated in unison by the bar *G*. Blocks *HH* form a simple but convenient support for the

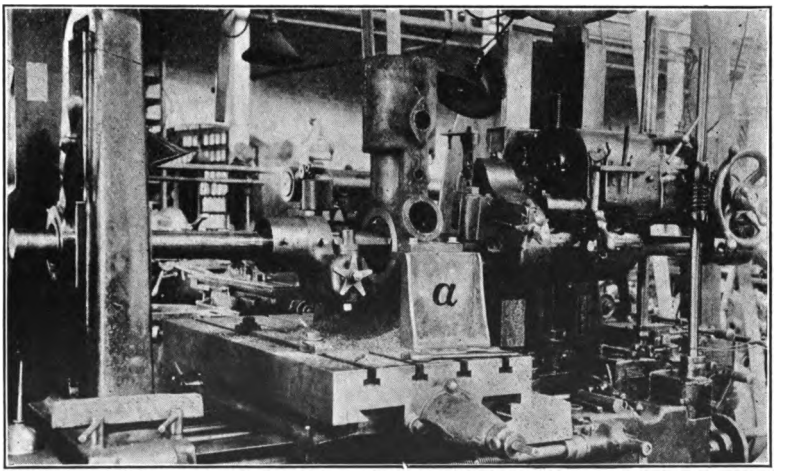

FIG. 5.—Boring gas engine base.

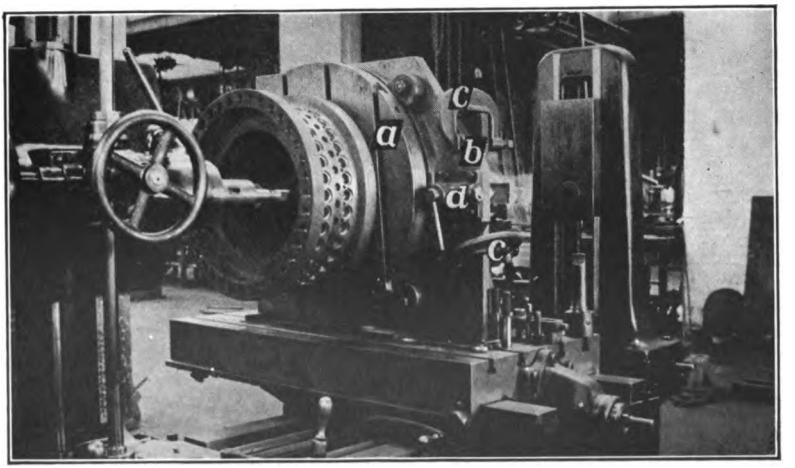

FIG. 6.—An unusual boring machine job.

boring bars not in use. It keeps the bars off the floor, free from dirt and safe from injury.

The second type of machine, while considered by some as primarily a tool room machine, is largely used in manufacturing operations in

Digitized by Google

shops of different kinds. Fig. 5 for example shows how a builder of marine gasoline engines bores the bed to receive the crankshaft bearing supports. Facing heads with star feed are provided at each side of the crank case so that after boring, the outer surfaces are

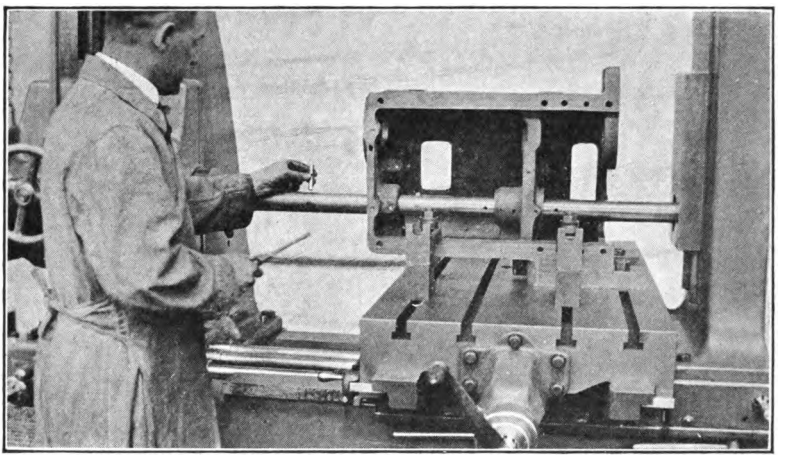

FIG. 7.—Inserting the facing cutter.

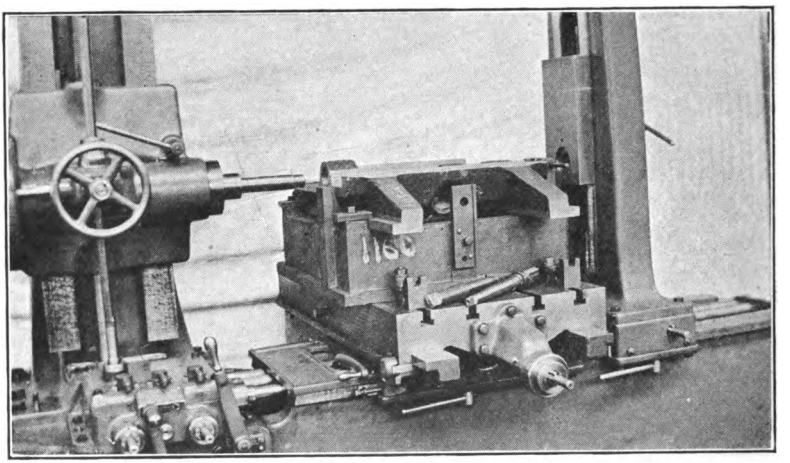

FIG. 8.—Boring and reaming a hole.

faced off square with the bore. The engine casting is supported on brackets, one being shown at *A*, the flange of the engine base bolting to the bracket.

An unusual boring job is shown in Fig. 6. Here the large circular

Digitized by Google

casting must have a large number of holes, accurately spaced and bored both radially and lengthwise of the piece. The circular or revolving table *A* has been removed from the bed of the machine and bolted to the plate *B*. This in turn, is held by heavy C clamps,

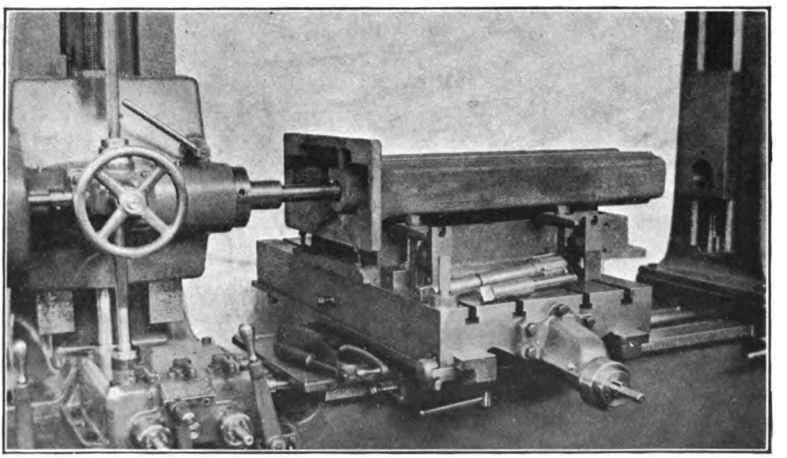

FIG. 9.—Boring for elevating screw.

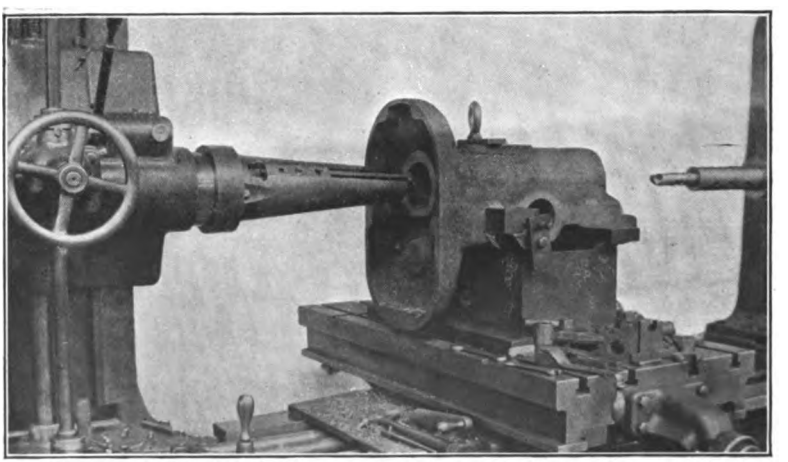

FIG. 10.—A taper boring bar.

C to an angle plate which holds the circular table vertical to the main table. The graduations on the circular table allow the work to be revolved a given number of degrees. Then the boring cutter is fed into the work by the wheel shown.

Digitized by Google

For boring the radial holes, the angle plate was swung parallel with the spindle and the circular table indexed in the same way. The clamp *D* holds it in any desired position.

A few plain boring operations are shown in Figs. 7 to 10. In

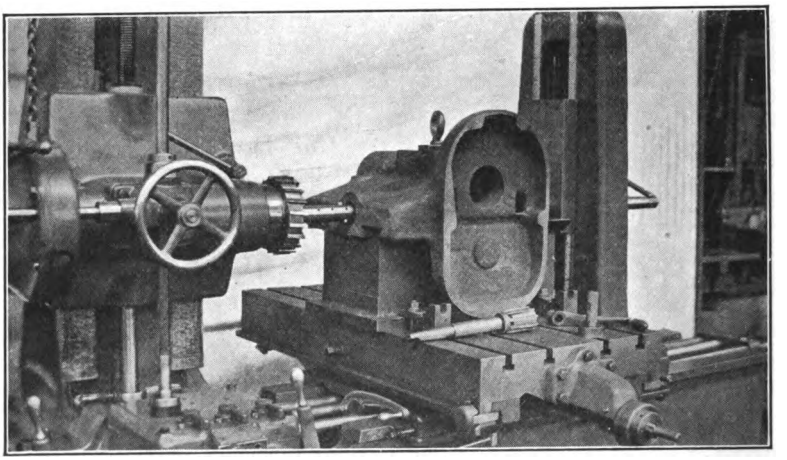

FIG. 11.—Boring a cross hole.

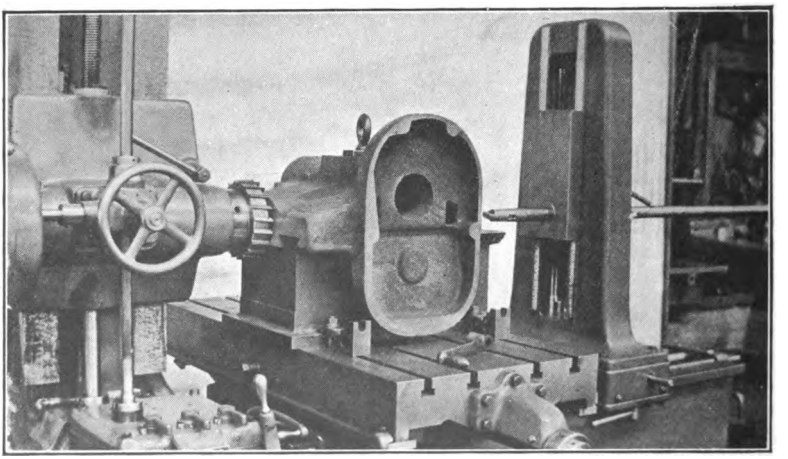

FIG. 12.—Milling at the same setting.

Fig. 7 a plain bar with inserted cutters is used. One of these has just bored the left hand bearing and the operator is putting in a longer cutter to face the end of the bearing. This is held by a set screw in the most simple fashion. Fig. 8 shows the use of a reamer for

Digitized by Google

finishing the hole, the reamer itself being on the table in front of the fixture which holds the work.

Another boring job is seen in Fig. 9, the hole for elevating screw being bored in the outer end support of one of these machines. The

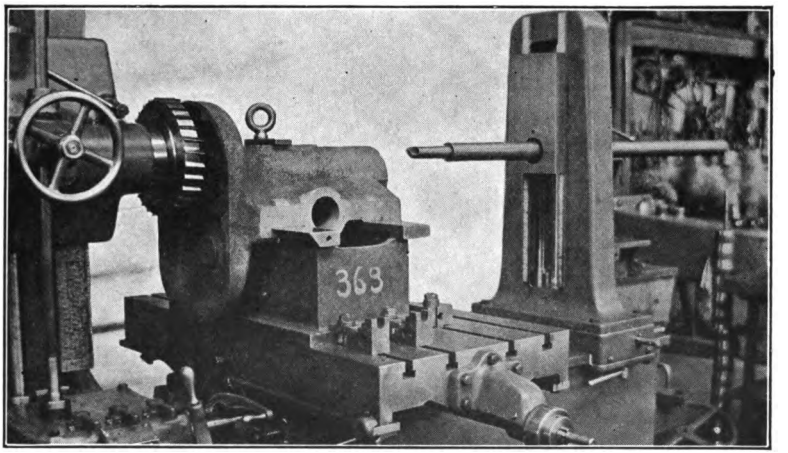

FIG. 13.—Milling the other end.

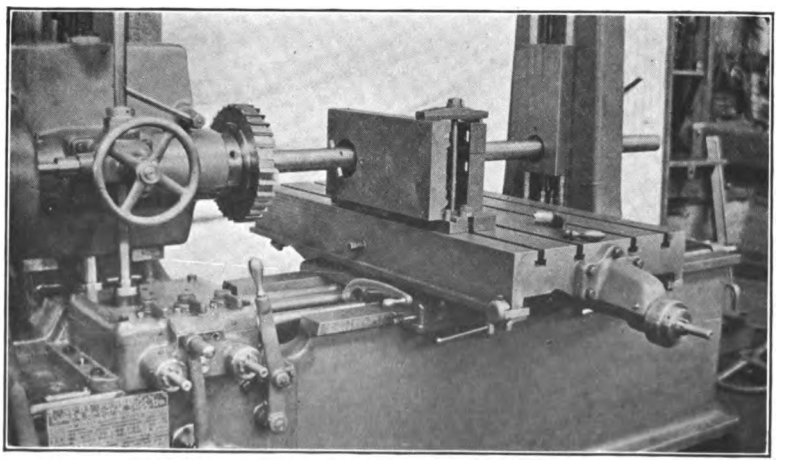

FIG. 14.—Boring a pair of slides.

boring bar is at work and the reamers for other operations may be seen on the table.

The method of boring a taper hole is shown in Fig. 10. A straight hole has been bored by the bar at the right which is now carried in

Digitized by Google

the outboard support. The taper boring bar is screwed to the nose of the spindle and has a slot in which the tool block slides when fed by a screw beneath. At the outer end of the screw is a star wheel

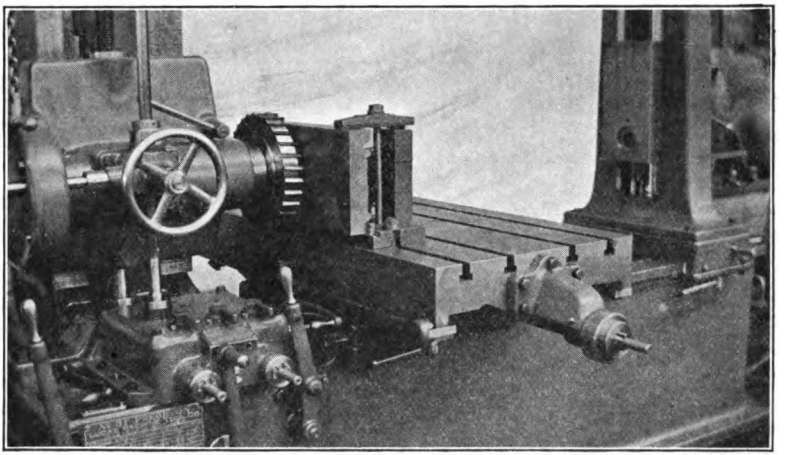

FIG. 15.—Milling at same set-up.

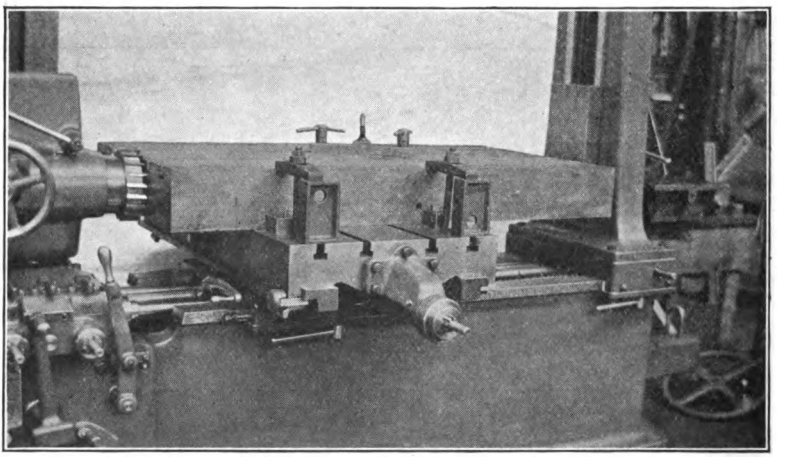

FIG. 16.—A larger milling job.

which gives the feed desired. In this way the tool block is fed along the slot in the bar and the desired taper is accurately bored.

The next illustrations, Figs. 11 to 14 inclusive, show work where a combination of boring and milling can be used to advantage. Fig. 11 shows the boring bar at work and at the same time the large

Digitized by Google

milling cutter screwed on the spindle ready for work. The reamer which follows the boring bar, is also shown on the table in front of the casting.

In Fig. 12 the boring bar has been removed and the milling cutter

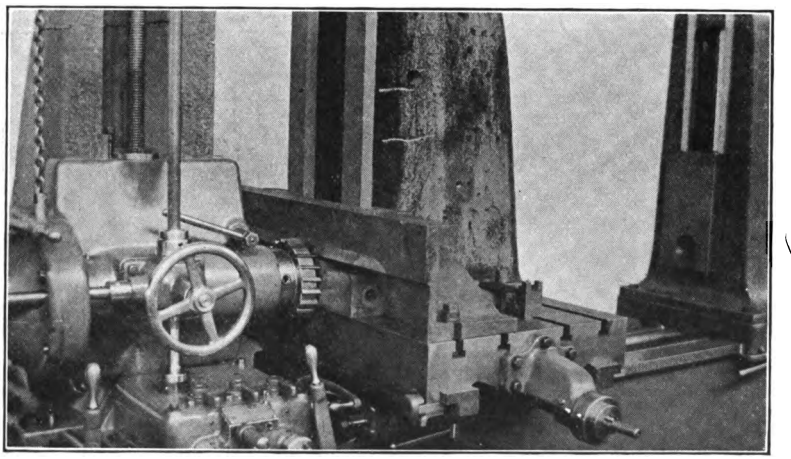

FIG. 17.—Milling face of another column.

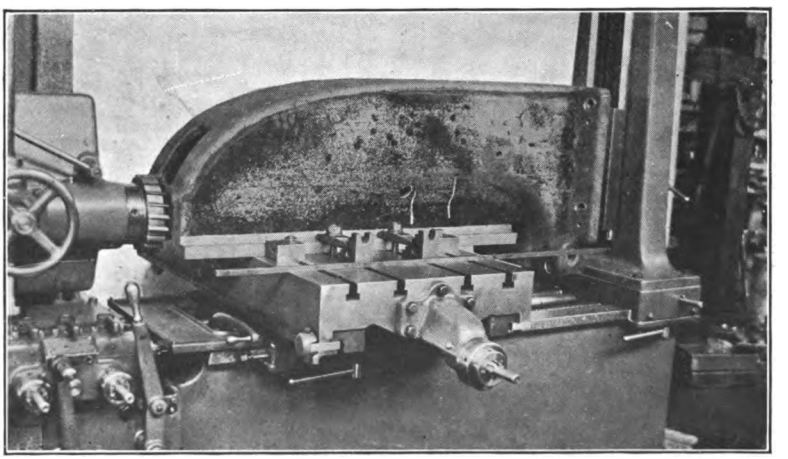

FIG. 18.—Milling the other end.

is at work surfacing the side of the casting. The table feeds across the bed while the head remains at the same height.

In Fig. 13 the same piece of work has been swung 90 degrees and a still larger milling cutter is at work on the large surface of the

Digitized by Google

casting. Here both the vertical feed of the spindle and the cross feed of the table, can be utilized to advantage.

Another and smaller job is shown in Fig. 14, where a double pointed cutter bores a good sized hole and the cutter faces the vertical side of the work. The milling operation is shown in Fig. 15.

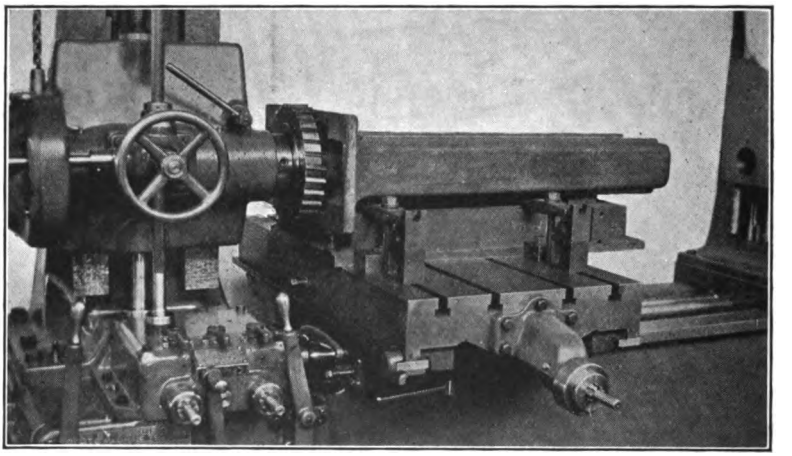

FIG. 19.—Milling base of outer support

Four large milling jobs are shown in Figs. 16 to 19 inclusive. The first is milling the end of a large table, Fig. 17 a large cross surface at the bottom of a column, and Fig. 18 the top of the same column. In Fig. 19 the large base of the outboard support is being surfaced by a large cutter which takes in the entire width at one cut.

Digitized by Google

CHAPTER II

THE HORIZONTAL MACHINE IN THE RAILROAD SHOP

The following illustrations show some of the kinds of work which machines of this type are doing in railroad shops. They need little explanation in addition to the captions under each cut. See Figs. 20 to 29 inclusive. These show actual work being done in different

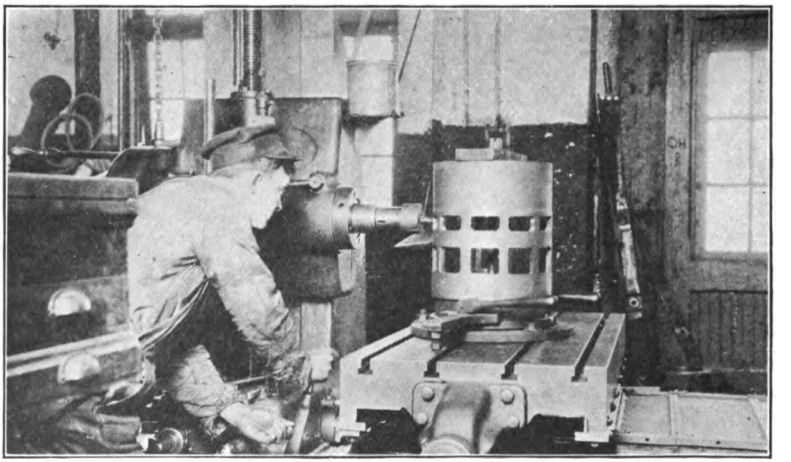

FIG. 20.—Milling posts in locomotive valve bushing.

railroad shops and contain many suggestions as to the methods used in holding the work, the tools used as well as general information regarding the shop practice in various parts of the country.

In Fig. 20 for example, the valve bushing is but a shell and care must be taken not to spring it out of shape. As will be seen it is clamped down on a fixture fastened to the table and is further fastened by a bolt through the center.

The holding of the steam chest in Fig. 21 is a very simple matter, and involves only the use of hairpin straps and blockings. The stuffing box is being turned with a sweep cutter. The centering plates, Fig. 22, are held in a special fixture so that three cutters are at work at the

Digitized by Google

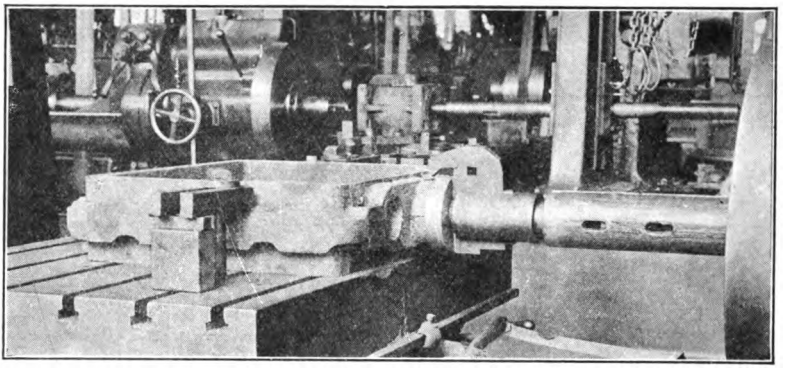

FIG. 21.—Turning with a sweep cutter.

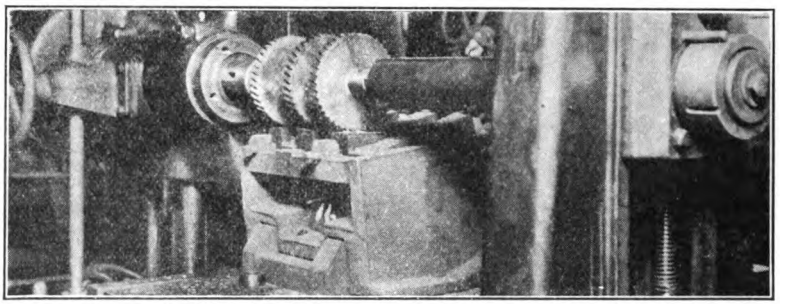

FIG. 22.—Swiveling fixture for milling angle.

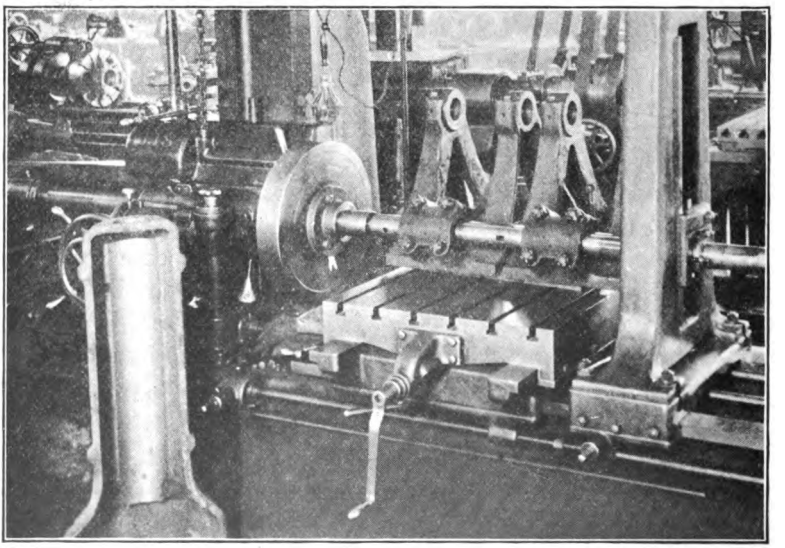

FIG. 23.—Boring link motion brackets.

Digitized by Google

same time. This fixture swivels so that the plates can be milled at any desired angle. This took the place of a regular, single fixture on a milling machine.

Fig. 23 shows two locomotive jobs, one on the machine and the

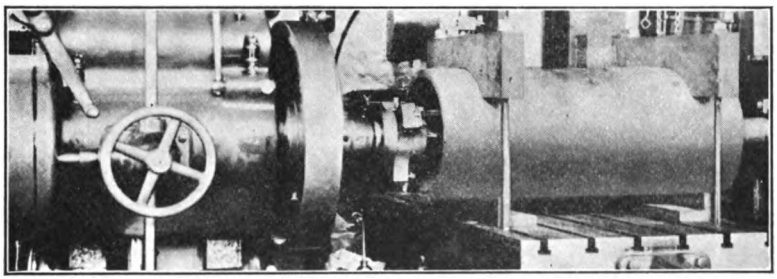

FIG. 24.—Boring long valve bushing.

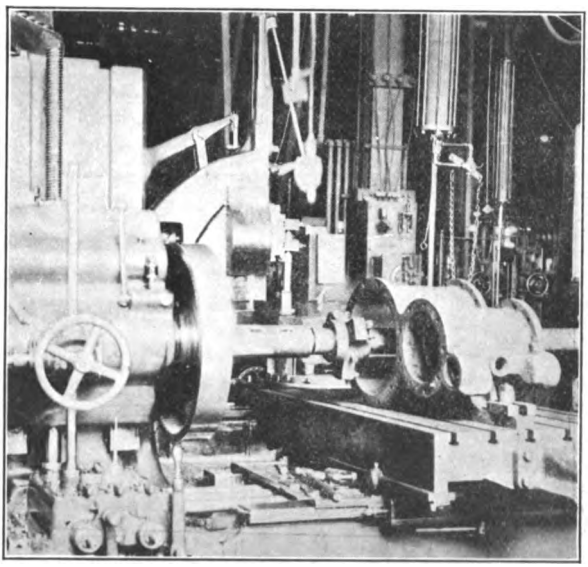

FIG. 25.—Boring compound cylinders.

other on the floor at the left. The link brackets on the machine have two holes as can be seen. The rapid power movements of the machine enable the bar to be easily raised to the upper position and also to move the table so as to bring the bar in line with the other holes. The forward guide for extended piston rods which stands at the left

Digitized by Google

was bored on the same machine. The half circle is bored with a sweep cutter.

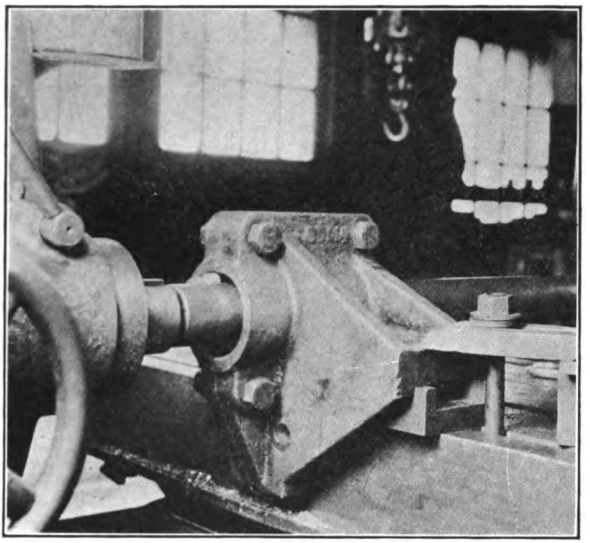

FIG. 26.—Boring a rocker-box.

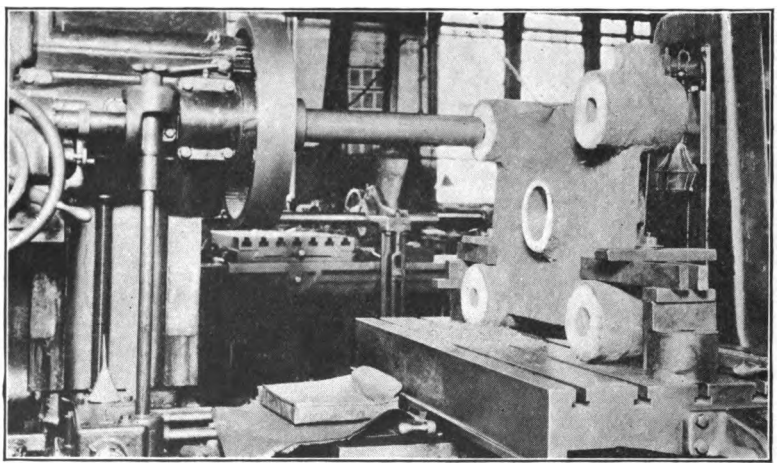

FIG. 27.—Boring five holes in crane head.

Another sweep cutter job is shown in Fig. 24 where a valve bushing is being bored. The clamping methods are simple, the use of curved blocks distributing the pressure so as to avoid spring-

Digitized by Google

ing the thin walls of the bushing. In Fig. 25 the machine is boring the two cylinders of a steam pump. Here again only one setting of the bar is necessary. The center distance between the

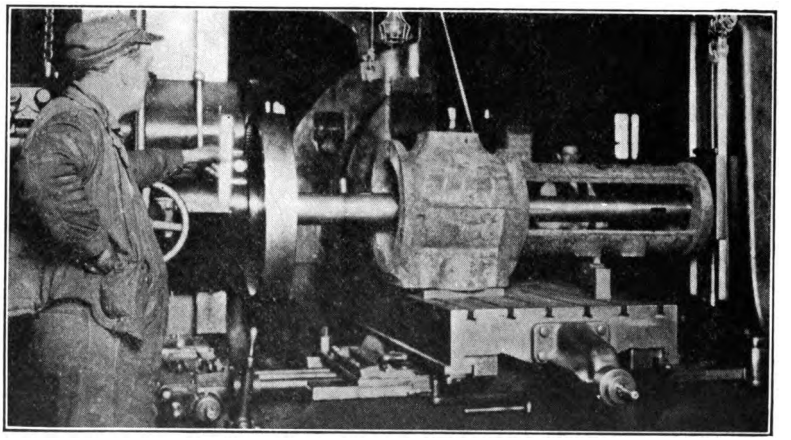

FIG. 28.—A steam cylinder job.

cylinders is secured by moving the table across the bed, measuring by the graduated dials on the cross feed screw.

The machining of a cast iron rocker-box is shown in Fig. 26. The two halves are clamped on the table and the faces milled

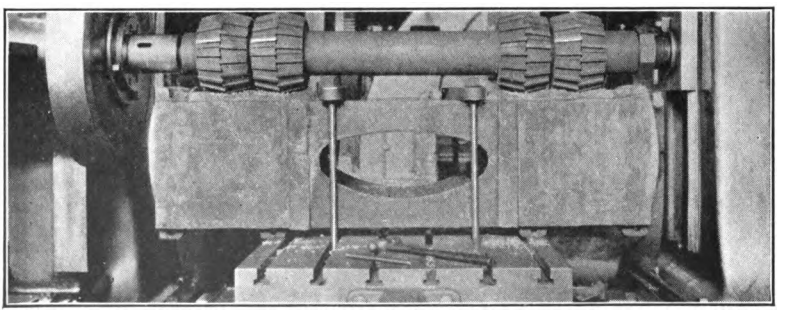

FIG. 29.—Milling roller seats for truck box.

at one pass of the cutter. They are then bolted together as seen in Fig. 26 and bored. Only simple clamping fixtures are needed.

An odd job of boring is shown in Fig. 27. The piece is a mast head for a walking crane and the five holes shown are drilled, bored to size, and faced at one setting. Here again only simple clamping

Digitized by Google

devices are necessary and the rapid power movement of both spindle and table.

Two other views, Figs. 28 and 29 show two widely different jobs. Fig. 28 is the steam cylinder and cradle of a washout pump. This involves considerable boring, both the cylinder and cradle being machined. Fig. 29 is a heavy milling job, this being the roller seats for a De Voy trailing truck box. Four inserted tooth angular cutters are used. These reduced the planing time by half.

Digitized by Google

CHAPTER III

UNUSUAL WORK ON A BORING MACHINE

The adaptability of an accurate horizontal boring machine when in the hands of skilled mechanics is illustrated in Figs. 30 and 31, which come from the toolroom of the Ford Motor Co., Detroit, Mich. A general view of the machine, which is a Lucas, is shown in Fig. 30, while Fig. 31 shows the cam cutting in detail.

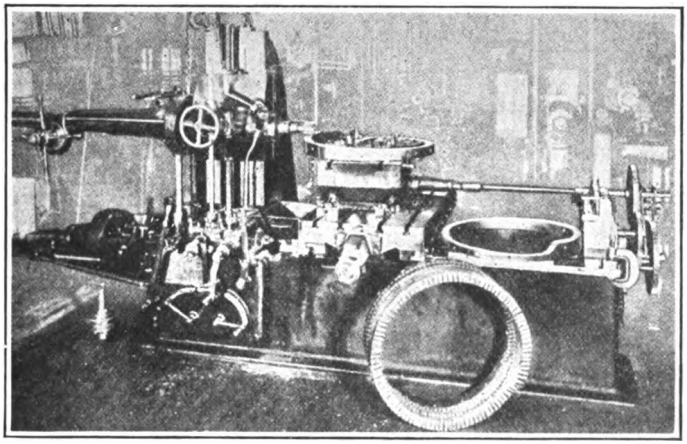

FIG. 30.—Cutting large cams.

The outer support has been removed from the end of the bed, and in its place is a housing, *A*, Fig. 31, held in position by two C-clamps. This support carries the gearing shown, which is driven from the head of the machine in the same way that the outer bearing is moved in the support which has been removed from the bed.

This gearing drives the rotary table *B* by means of shaft *C* and the gearing is so proportioned as to turn the cam being cut in the correct relation to the milling cutter which is raised at the proper rate by the elevating screw of the regular spindle head.

The method of cutting the blanks for the cams can be seen from the cylinder standing in front of the boring machine. This is turned

Digitized by Google

and bored to the proper dimensions and is then cut up by drilling a series of holes so that one line makes a straight cut, while the next row of holes gives a very close approximation to the contour of the finished cam. The screw holes for fastening the cam in position on the machine are also drilled at the same time, so that the cam is completed, except for a few finishing touches, when it comes off the rotary table of the machine.

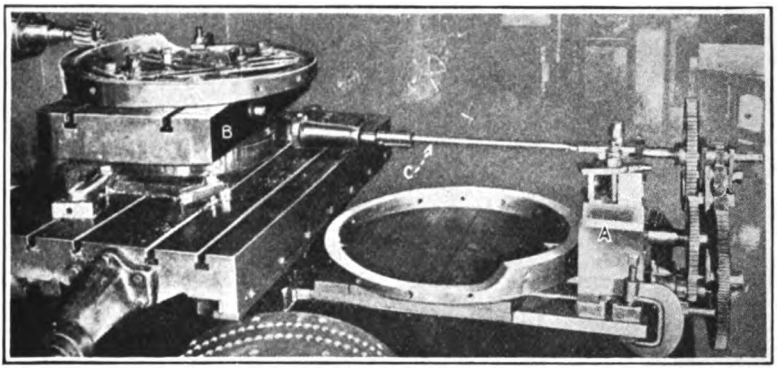

FIG. 31.—Details of the work.

While this is an unusual method of cutting cams for automatic machines, it has been found very satisfactory, and reflects credit on the ingenuity of those who devised it.

CUTTING LARGE GEARS ON A HORIZONTAL BORING MACHINE

While the horizontal boring machine is not particularly designed or recommended for cutting gears, Fig. 32 shows how the Lucas is utilized in handling quite a variety of gear work in the shop shown.

The circular table, with its dividing head, was secured from the Brown & Sharpe Manufacturing Co., and with it, gears and sprockets of various kinds are being cut as the necessity arises. The cast-steel spur gear shown in position on the table is 51 in. in outside diameter, and has a 7-in. face and 1½-in. circular pitch. It is also stated that both the bevel gears and sprocket wheels shown on the floor have been cut with this same device. In cutting the bevel gears, it was, of course, necessary to incline the circular table to the proper angle by means of suitable blocking between it and the regular table of the machine itself.

Digitized by Google

A NICE INDEXING JOB ON A BORING MACHINE

The work shown in Fig. 33 is part of a special machine for incandescent-lamp making and consists of what might be called a spoked

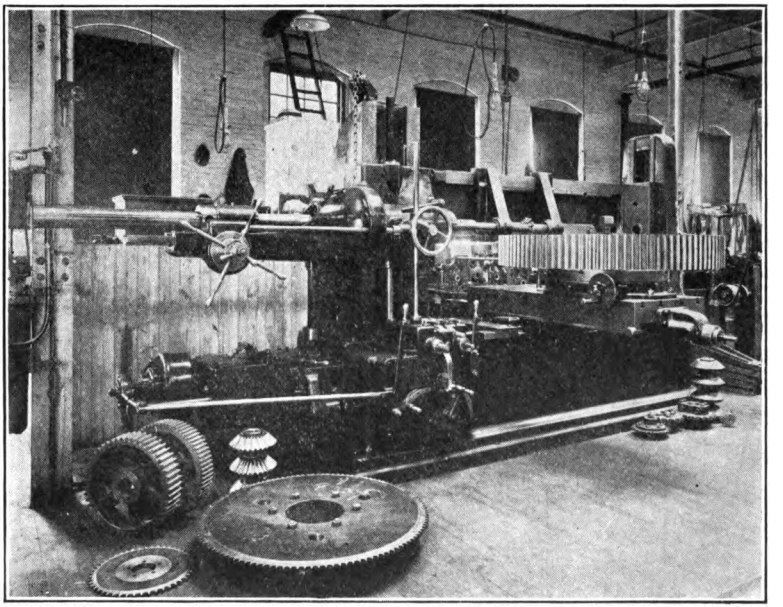

FIG. 32.—Gears of various sizes.

disk with 20 holes in the rim, as shown. The smaller holes inside are not an essential to the device, but were rough bored to remove the skin and help relieve internal strains.

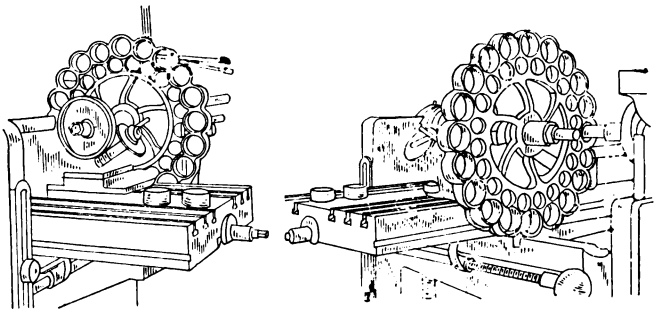

FIG. 33.—A nice indexing job.

The outer holes are 2⅞ inches in diameter, and their centers lie in about a 21-inch circle. The metal is 1½ inches thick at the rim.

Digitized by Google

Boring 20 holes of this diameter, and having them all parallel, as well as uniformly spaced, is not an easy job on any boring machine.

The first step was to find some good means of indexing the holes. For this purpose the index head of a Brown & Sharpe milling machine was bolted to the table of the boring machine so that the disk could be mounted on its spindle and swing clear of the edge, as shown.

A boring bar with a fly cutter was put in the spindle, and an angle casting placed at the front of the table so the disk could be clamped rigidly after indexing. The side of the disk was, of course, faced to allow it to be clamped squarely before beginning the cut. For the roughing cuts, the disk was also clamped at the opposite or back side.

There is very little explanation needed beyond this, as the illustrations show what a really simple job it is, after all, when you go about

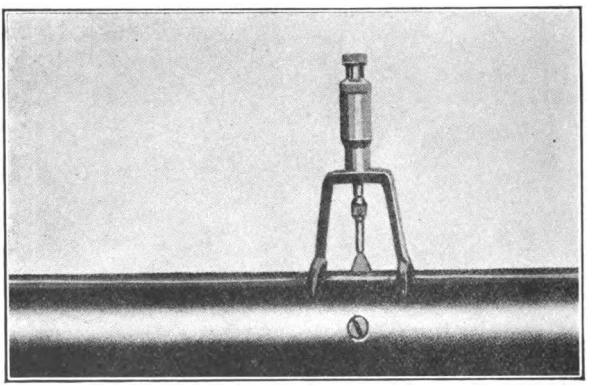

FIG. 34.—Tool setting gage.

it in the right way. While it is not possible to do as accurate indexing with the indexing wheel so much smaller than the work, as in this case, it is interesting to note the accuracy obtained. The testing was done by measuring the walls left between the holes; after the second cut, there was only 0.007 inch difference between the thickest and the thinnest wall and this was reduced somewhat on the last cut.

TOOL SETTER FOR BORING BARS

The small tool shown in Fig. 34 is to the boring bar what the graduated dial and stops are to a grinder, lathe, shaper or miller. To obtain predetermined diameters in boring holes presents quite a different problem than on any of the above named machines, owing to the absence of devices for setting the tool.

Digitized by Google

Here we have a massive machine provided with powerful drives and with all the necessary speed and feed changes to rotate the cutting edge (the single-pointed cutter being under consideration), the quick and accurate setting of which largely determines the output of the machine, both as to quality and quantity.

It takes much practice to set a tool accurately by tapping on the end, and it is necessarily only a cut-and-try method. If the tool has been forced out a trifle too far and a cut taken, say, ⅛ in. deep, to admit of calipering, the work will show a small shoulder, which looks quite bad.

The body of the small tool shown is of rather light construction, which enables the operator to set the cutter accurately, as the slightest touch can readily be felt. It has also been demonstrated that, after the first hole is bored to the proper size, the setting can be taken and duplicated for the remaining holes, securing a nice plug-gage fit without the use of calipers or micrometers.

The tool is of particular advantage in boring castings of the shape shown in Fig. 35, in which the distance *A* makes the use of ordinary calipers too inconvenient, and also in small holes in which the space around the boring bar is not sufficient to admit the ends of the caliper legs.

Referring to the detail drawing, Fig. 36, will be seen that the construction resembles the ordinary micrometer, the spindle having 40 threads and the thimble 25 graduations. An extension is provided which can be unscrewed in case the cutter extends some distance out of the bar.

Digitized by Google

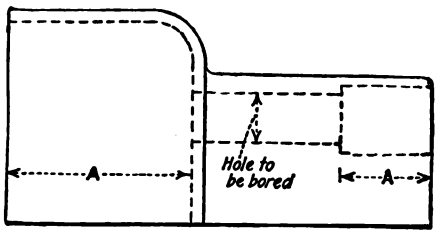

FIG. 35.—Example of hole to be bored.

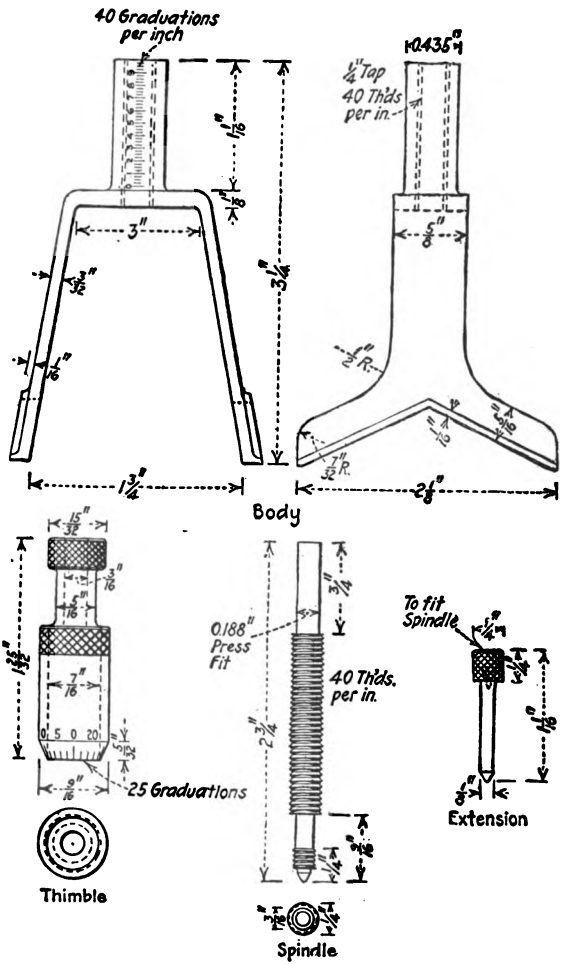

FIG. 36.—Details of the gage.

Digitized by Google

CHAPTER IV

THE VERTICAL BORING MACHINE OR "MILL"

The striking difference between the horizontal and vertical boring machines which is first noticed is that one has a horizontal and the other a vertical spindle. The radical difference in operation, however, is due to the fact that in the horizontal machine the tool revolves in or on stationary work. In the case of the vertical machine, however,

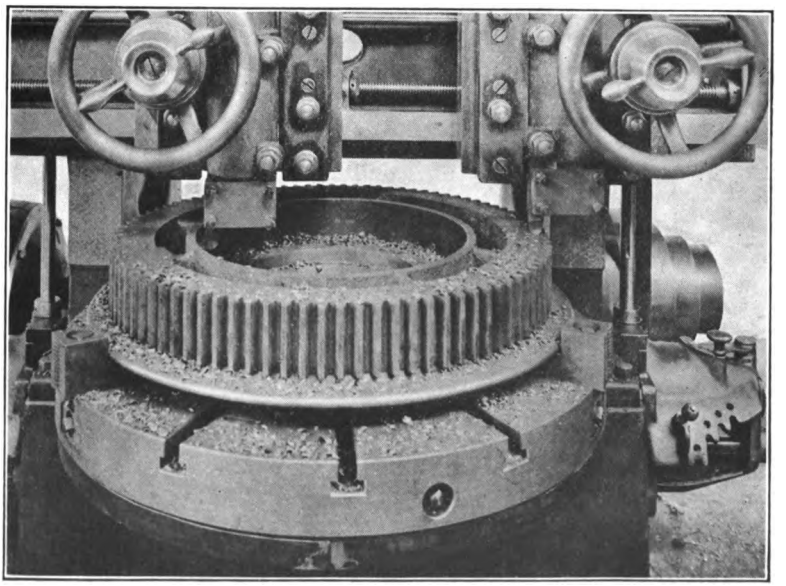

FIG. 37.—Boring and facing gear.

the tools are stationary while the work revolves. One means of distinction in common use is to designate the horizontal boring machines as boring "machines" and the vertical machines as boring "mills."

The vertical machine has a wide field of usefulness and is distinctly a manufacturing machine, but can also be used advantageously for work in small quantities. The horizontal face plate or table is very

Digitized by Google

convenient for chucking or otherwise holding the work for machining. Being horizontal it is very easy to place work on it and adjust it for machining, in contrast with the vertical face plate of the lathe. The work is revolved at suitable speeds and the tools used either for turning or boring.

Nearly all boring mills have two tool heads so that one can be boring at the same time the other is turning the outside. On some machines there is a third head at the side, much as in the case of the planer. This however has both vertical and horizontal movements so that it may be compared to the carriage of a lathe. These machines

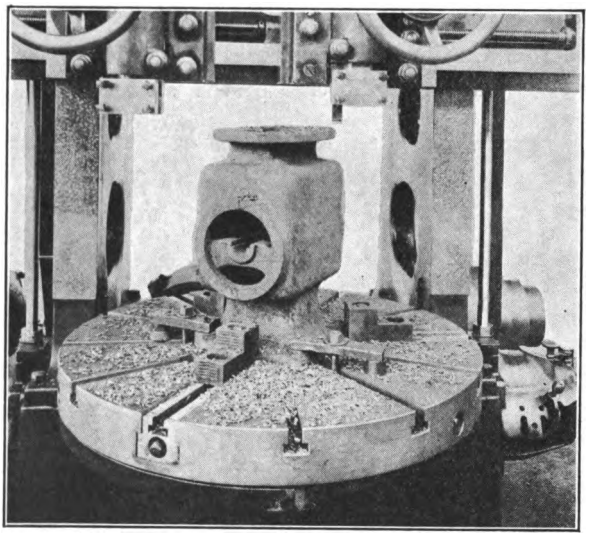

FIG. 38.—Facing flanges.

are called vertical turret lathes and examples of their use will be shown later.

Small machines are made with both one and two tool slides and with turret heads. On larger machines, over 42 inches, turret heads are not recommended as it is considered more economical to force each tool to its limit. Solid tool heads can stand more cutting stress than turret heads, as every joint allows some play.

WORK ON A VERTICAL BORING MILL

The following illustrations Figs. 37 to 53, of work being done on the vertical boring mill speak for themselves. In Fig. 37 the gear is held by the rim by a combination chuck. The left hand

Digitized by Google

head carries a tool for boring while the other tool faces the gear. The cutting speed must be governed by the tool on the largest diameter, and as the hole is done at the same time, it does not matter if the speed is less than might otherwise be used.

An operation on a small ice machine base shown in Fig. 38. The base flange is held to the table by three chuck jaws and straps are also provided to keep it from lifting.

Figs. 39 and 40 show the use of multiple tools, the same tool post

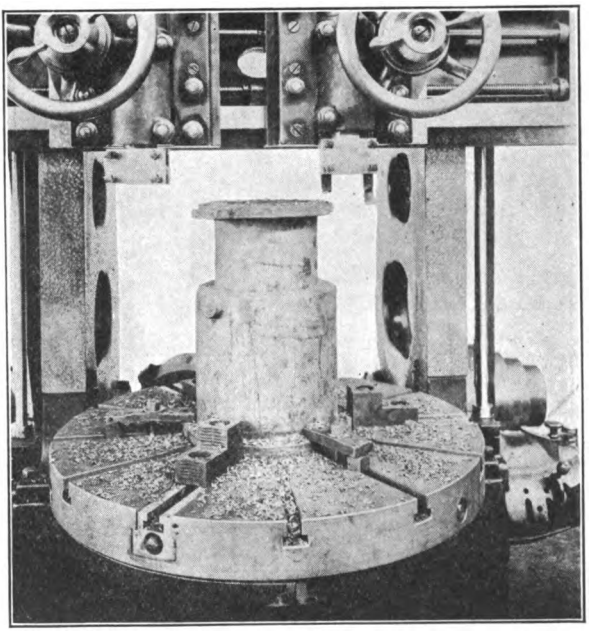

FIG. 39.—Rough and finish tools in same head.

holds both rough and finish tools for surfacing. In Fig. 40 the other head is turning the outside of the flange at the same time.

The next example Fig. 41 is from a railroad shop, this being an eccentric for a locomotive. The combination chuck is used, the jaws being so set as to bring the hole in the center.

Fig. 42 shows the chuck with one jaw set out to accommodate the odd shaped piece, the casting resting on the first step to allow space for boring tool to pass through the cylinder. The other tool head, feeding independently, can face much of the surface during the boring operation.

The next illustration, Fig. 43, shows a typical lathe job except

Digitized by Google

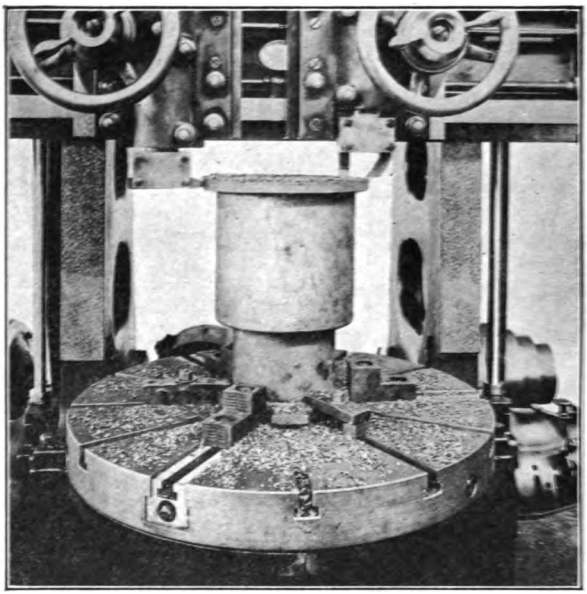

FIG. 40.—Three tools at work.

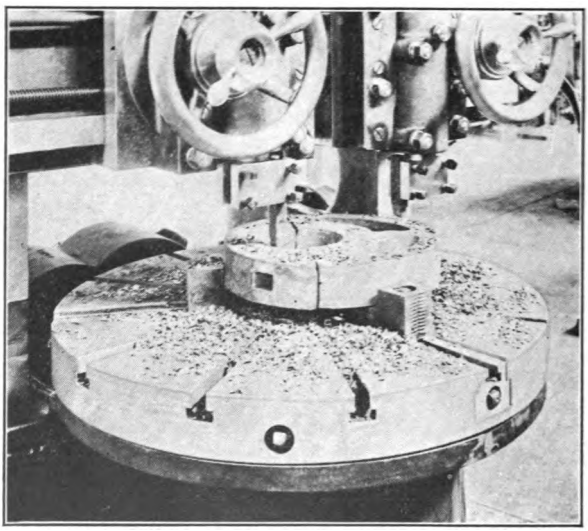

FIG. 41.—Boring and facing locomotive eccentric.

Digitized by Google

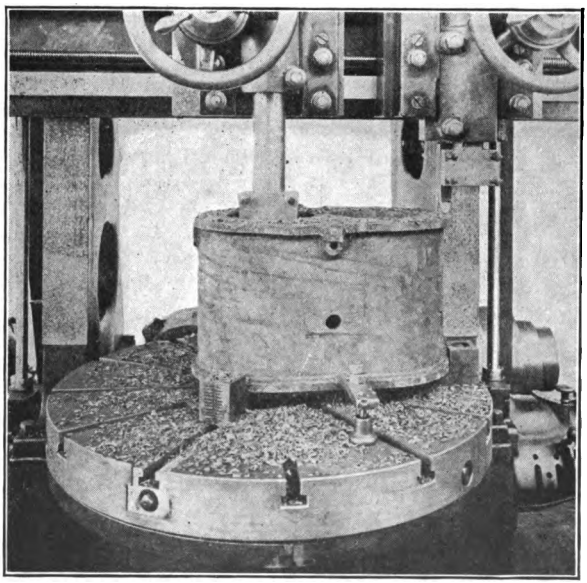

FIG. 42.—Boring compound cylinder air pump.

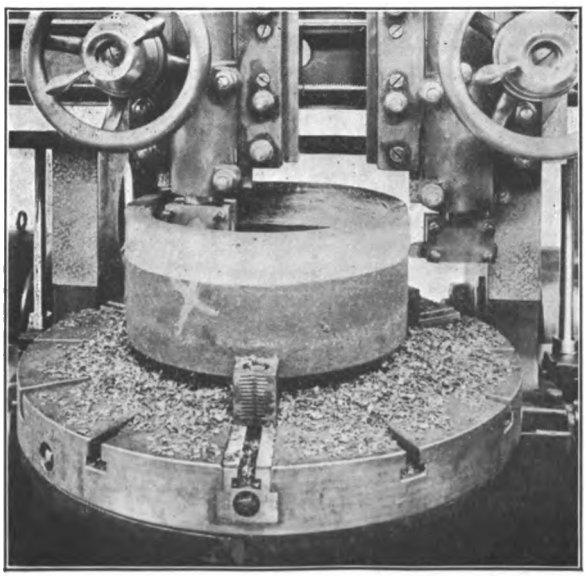

FIG. 43.—Turning and boring at same time.

Digitized by Google

that it would not be as easy to turn and bore at the same time, owing to the overhang of the work without support. The horizontal table

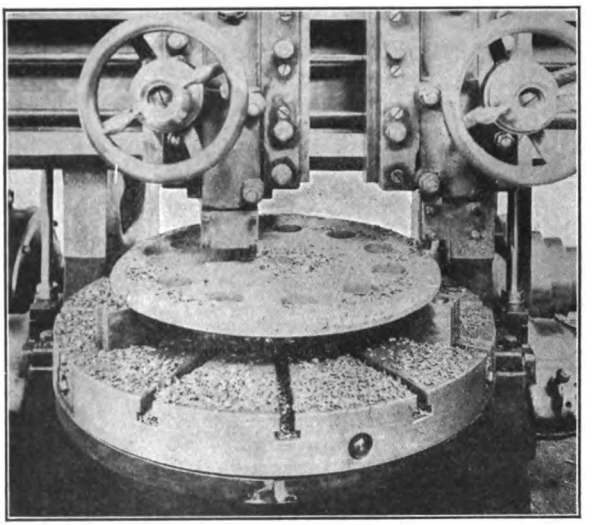

FIG. 44.—Another double tooled job.

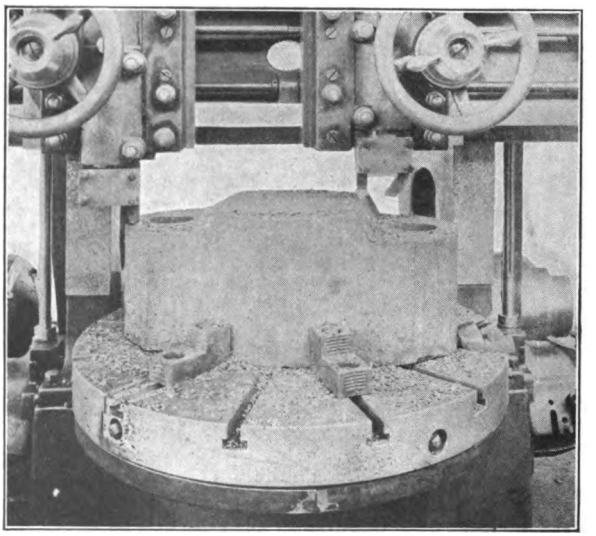

FIG. 45.—Another unusual job.

makes it convenient to handle and chuck the work and there is no overhang. Another face plate job is shown in Fig. 44, the center tool facing the hub while the other tool faces the rest of the plate.

Digitized by Google

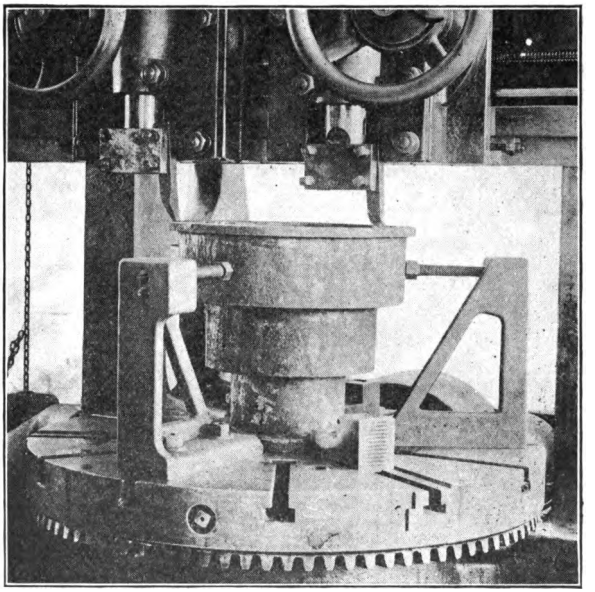

FIG. 46.—Boring and facing cone pulley.

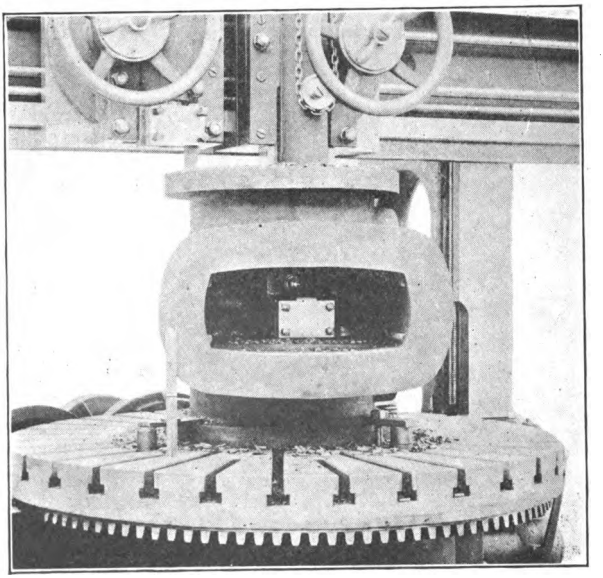

FIG. 47.—Boring seat and facing flange.

Digitized by Google

An unusual piece is shown in Fig. 45 where the left hand tool faces the two outer portions and the two tools at the right, rough

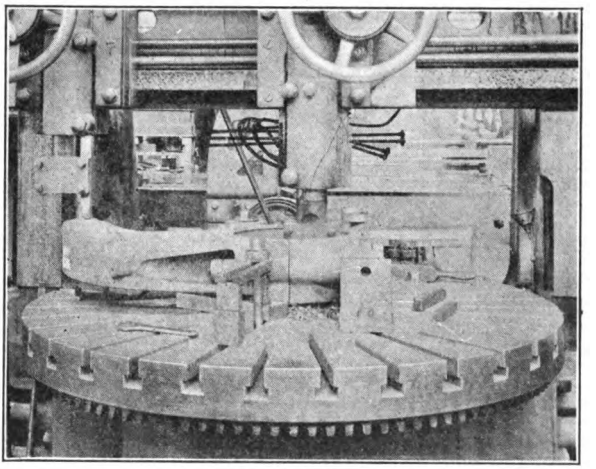

FIG. 48.—An odd shaped piece.

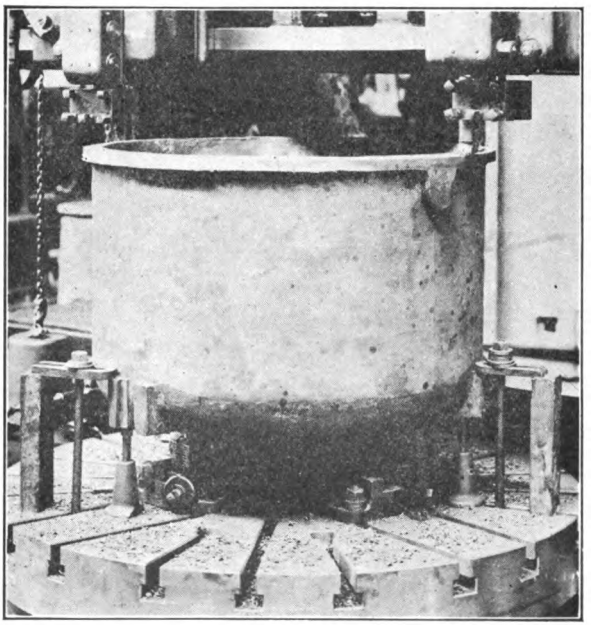

FIG. 49.—Supporting a large kettle.

and finish the central hub. The work is held by chuck jaws and a screw-dog, which may be useful in other places.

Digitized by Google

Fig. 46 shows how special fixtures can be used on the boring mill table. After the cone pulley is faced and boxed, it can be reversed and turned on the boring mill if desired. In most cases, however, the turning would be done in a lathe.

A job that is out of the ordinary is shown in Fig. 47. The left hand head is facing the top flange of the valve body while the other head faces the seat for the gate valve. Another unusual job can be seen in Fig. 48, utilizing both heads and the full size of the table.

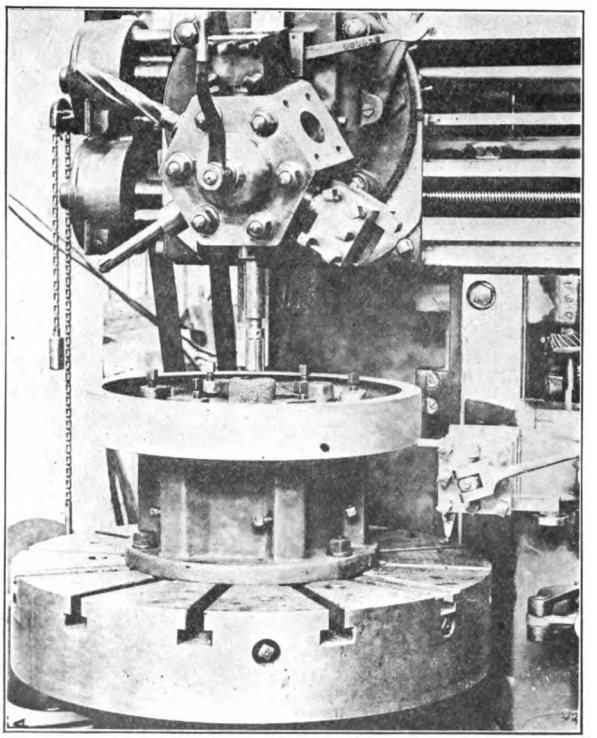

FIG. 50.—Using turret and side head.

An unusual job and one that would be difficult to hold on any type of horizontal machine is shown in Fig. 49. This is a large kettle with a rounded bottom, making it necessary to support the outer edges by screw jacks and to strap the ears down against these jacks. The chuck jaws support the bottom of the kettle.

The machine shown in Fig. 50 is a vertical turret lathe or a boring mill with a side head. The flywheel is held on a special fixture which hooks over the arms. The tools in the turret drill, bore and ream

Digitized by Google

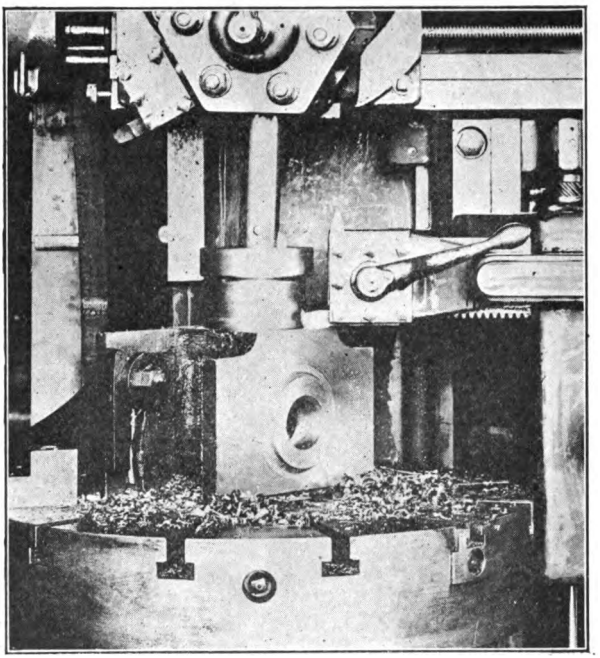

FIG. 51.—Turning and boring cross head.

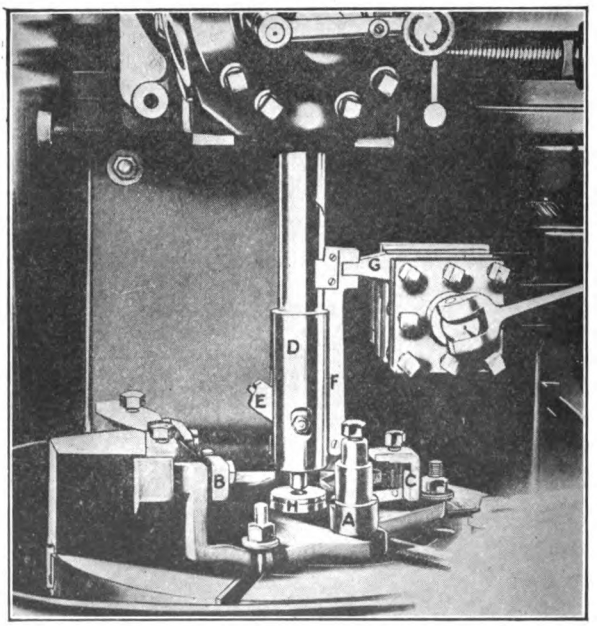

FIG. 52.—For boring a spherical hole.

Digitized by Google

the hole and also face the hub and sides. The side head turns the rim. The roller in side head turned up to the position of the turning tool, helps center the wheel in the fixture. Another job for this type of machine is shown in Fig. 51, this being a locomotive cross head.

A fixture which is full of suggestions is shown in Fig. 52. The work, an odd shaped casting, fits over the stud *A* and is held by the clamps *B* and *C*. The boring bar *D* carries a swing cutter *E*, the back end being connected to the side head *G* by means of the bar *F*. The bar *D* is also guided at the bottom by the bushing *H*.

With the casting in place, the bar *D* is run down into the bushing and the table started. Then the side head is fed up and the bar *F* swings the tool in the bar, boring a spherical hole.

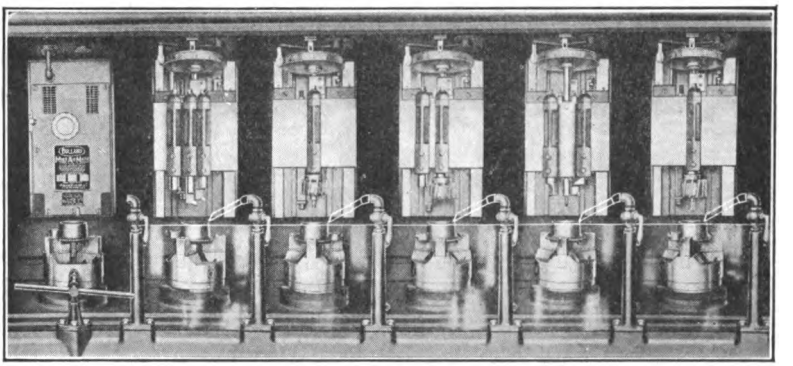

FIG. 53.—A six-station boring mill.

A modern development of the boring mill is shown in diagram in Fig. 53. This is the six sides of a Bullard mult-au-matic unfolded so as to be all visible at once. The one at the left is a loading station, each of the other five performing as many portions of the operations as seem best for the work in hand. The first working head rough bores the inside and rough turns the outside. The second rough reams the inside, the third does the second reaming and again turns the outside. Still other operations are performed at station four, the finishing being done at the last station.

These stations are arranged around a central column, the work spindles being carried in circular table which indexes automatically from one station to the next.

Digitized by Google

CHAPTER V

METHODS OF HOLDING WORK TO BE TURNED AND BORED

A feature of boring- and turning-mill work which might well receive careful consideration is the various methods of holding and securing the work while in process of machining. Since we recognize in the boring mill a capacity for enlarged production due to increased power and tool steels, proper allowance should be made for very liberal securing and driving devices.

It is essential, to secure quantity of work as well as accuracy and finish, to have the job literally become part of the revolving mill table, whether chucked, bolted and clamped or a combination of both. The operator's attention is fairly well occupied with watching and sizing the rapidly finishing product and should not be confused with a feeling that the work may "unload" before finished. These holding and driving devices should permit of as great latitude of quick and easy adjustment as possible consistent with the minimum and maximum range of the machine.

Faced surfaces must be parallel to one another and at right angles to the bore; the boring operations should be accurately concentric or eccentric, as the case may be, with any turned surfaces. Likewise angular surfaces and taper boring can be accurately predetermined to give the desired results, while for taper thread cutting the vertical slide can be adjusted to produce faultless steam-tight joints that fit the full contact.

CHUCKS AND THEIR USES

Where the machinery of a large quantity of pieces in duplicate is necessary, the combination chuck is very valuable. This chuck is especially suitable in railroad service, the maintaining of wheel work alone furnishing quite a variety of jobs, besides boring steel tires, turning wheel centers and making retaining rings. Fig. 54 shows about the full capacity of the universal chuck, holding a steel-tire wheel to face off the cast-iron hub. The weight of this size job readily adjusts itself in a horizontal plane by resting naturally on a three-point bearing formed by the faces of the chuck jaws.

Digitized by Google

This insures the finished hub being parallel with the wheel flange and at right angles with the tread. This style of wheel is generally used in locomotive trucks where the hubs come in contact with the truck journal box. When in service for some time, these hub faces wear quite badly, sometimes requiring the application of false hub plates. In repair work the original hub is trued up and counterbored or recessed to allow using these hub plates to maintain the proper thickness at wheel center.

This chuck can be easily and quickly rearranged—by simply releasing two tap bolts in each jaw—withdrawing, reversing, replacing and securing jaws properly centered on the chuck slides. By using the center indicator or table circle lines, keeping in mind the fact that the chuck slides were set true in holding the last wheel, they should close up on the hub plates quite accurately for the completion of the job.

While the four-jaw independent chuck is not quite as handy in

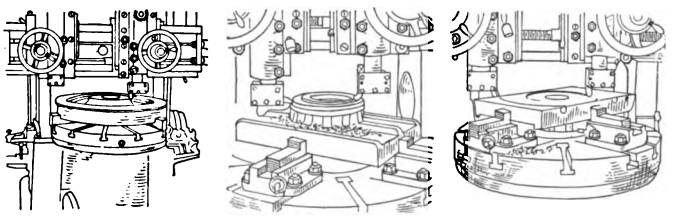

FIGS. 54–56.—Examples of chucking.

setting work to be accurately duplicated, it has some excellent features. The fact that the points of adjustment are equally quartered is in itself a great advantage in setting any variety of work, since the amount of error in either two jaws is very readily ascertained by giving the table a half turn and then moving the opposite pair of jaws just half the difference the job runs out.

Other good points are that the chuck-jaw faces form good liberal parallel surfaces on which many styles of work are readily leveled up; noting the two high points on a piece of material when first laid on the chucks, the "rock" can be readily taken up by the use of thin metal liners or shims where needed. Also the features of elevation or height of chucks from the table surface is very serviceable and the only means possible of advantageously holding many styles of work with lugs, offsets, projections, etc., which drop or can be let down below the top line of driving contact. Again, square or four-sided pieces are very securely held against any tendency to turn in the chuck.

Digitized by Google

TURNING TRUCK CENTER CASTING

A good example of this is seen in Figs. 55 and 56. First, turn up the flange and then face the bearing to fit in the engine-truck frame center casting. Then face off enough to true up the reverse side to form a bearing up against the under side of the cylinder saddle.

The advantage of double-tool contact, four-sided positive drive and chuck-jaw elevation is here readily apparent; as when the job is turned over, it naturally rests level on the first trued surface.

In the second operation we get good results from the use of both heads, by first just truing up the four corners for about an inch; this cut is then given to the left-hand head. Now change the tool in the right head to face cut out (machine at rest); carefully lower vertical slide; note exactly where the pointer comes on the graduated scale fastened along the edge of the slide. This vertical scale is made of a fine grade of rolled brass, kept polished; the graduations and figures are black. Thus the easy and direct reading feature is readily apparent; the material was a suggestion of the Lufkin Rule Company, which made the scale.

The depth of this cut is then transferred to the center of the casting by raising the right tool. Move the head to the central position again, and carefully lower the tool to the previously noted position on the vertical scale. Engage the tool in the cut to feed out and about midway of the machined surface; if the points have been carefully changed, the cuts ought to match sufficiently accurately for this class of work. In any event the right tool should be the lower one, so that when the casting is bolted up to place, the outer corners and edges will bear all that is necessary.

HOLDING DRIVING BOXES

This work is facing flange to thickness and boring out a locomotive driving box, and it is additionally secured by use of clamps across the diagonal corners on the lower flange. Thus the box will be held down firmly on a parallel chucking ring in Fig. 57. On this pattern of box such a device is doubly handy in making a base for the box to rest on, as the inside hub face, receding from the flanges, leaves no support on top of the chuck-base faces. The parallel ring is used in boring all driver boxes, as it permits the boring bar to pass down clear of the bottom cut. Then, too, as this is a rather high-speed job, using this ring retains all the brass boring chips from flying off around the mill, diverting the chips down the hollow spindle into the

Digitized by Google

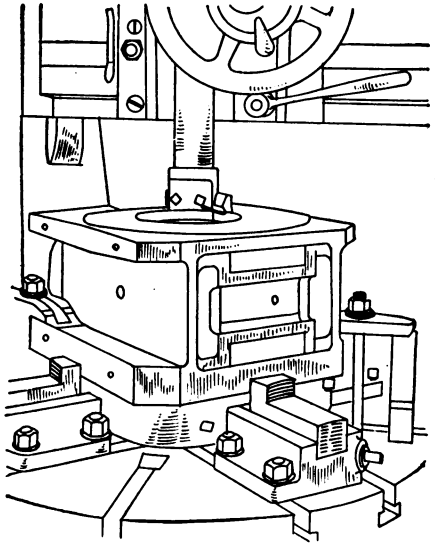

FIG. 57.—Chucking driving box.

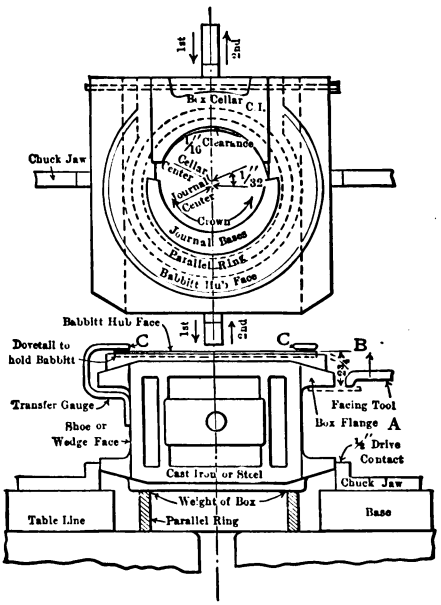

FIG. 58.—Details of driving box job.

Digitized by Google

foundation chip trough, while a good portion of the babbitt facing chips are caught in the hopper back of the table and fall into the removable chip pans; this is something of a time saver and metal-separating feature when the whole job is cleaned up to work a different kind of metal.

In accurately setting the right tool to face the hub bearing to flange thickness (2¾ inches), lower the right tool just even with the under side of flange *A*, Fig. 58. Use a small scale as a straight edge to get the height correct. Note the relative position of the pointer on the vertical scale. Raise the slide an even 3 inches, lock in the friction vertical feed, use lightly the vertical slide lock on the saddle, then turn down the vertical feed ¼ inch and set the saddle lock tight. This takes up any slackness at all points and leaves 2¾ inches, as at *B*. Try with calipers as the cut progresses; with a little care alterations are seldom necessary, though when needed the scale is always firmly in place to indicate the exact change desired.

On the faced hub, transfer points equivalent to the shoe and wedge faces *CC;* move the box crosswise to bring these points central with the bore; only permit the tool on the sizing cut to true up the brass in the crown, that this may be left as heavy in that point as possible.

With a favorable pattern the brass journal fit and thin cellar flanges will be bored at the same time. To get proper journal clearance on the cellar flanges, use the same tool without moving it on the cross rail. First move the box out of center toward the crown $^1/_{32}$ inch, bore the flange and return to original position until the tool barely scrapes the brass journal; replace the tool and take a smooth, light, finish cut.

FINISHING CYLINDER HEADS

In locomotive maintenance the making of cylinder heads, both front and back, furnishes quite an amount of work, and is advantageously handled on the boring and turning mill, with double-head tools on nearly all operations.

Figs. 59 and 60 show successive steps in finishing a back cylinder head.

THE TOOL OPERATIONS

With Fig. 59, if the casting is very rough on the edges and corners, use a rather blunt facing tool as a "corner breaker" and knock off the roughest, so that the tool will have a clean edge to start on and hold up the cut. Having previously set calipers engage the right-hand

Digitized by Google

facing tool 1 at the corner of the flange and give a good heavy chamfer, all that the head will require at the finish. Then use that as a vertical size cut to the left tool 2. Move the right tool to the corner of the

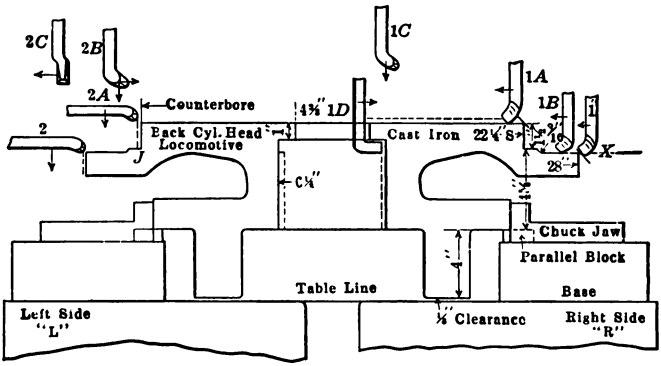

FIG. 59.—First operations on cylinder-head.

centerbore projection; chamfer heavy and start the cut on the top of the projection face just to see how it trues up at 1*A*. Withdraw same to clear the edge of the flange, drop down to line *x* with tool *B* to feed in. By this time tool 2 will have finished the edge of the flange; raise it up to the top edge of the projection. With 2*A* rough

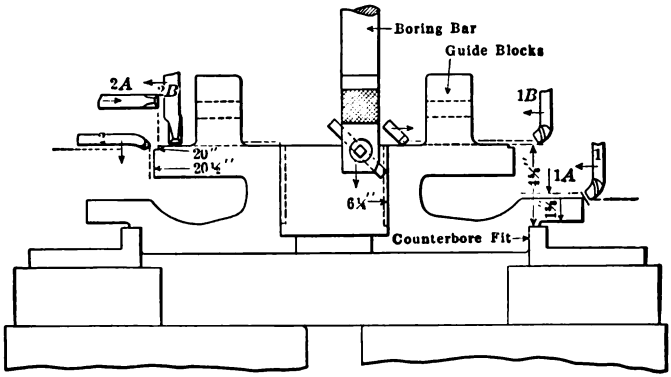

FIG. 60.—Finishing the cylinder-head.

down the counterbore fit. Tool *B* will about have faced into the joint; raise it up to resume and finish cut 1*A* again. When 2*A* is ready to remove, engage 2*B*. Rough off the joint; size down the projection and square out the corner. Finish a good smooth joint with square-nose tool 2*C*.

Digitized by Google

During these left changes, 1*A* will have about faced off the top. Speed up the machine; bore the piston hole and with tools 1*C* and 1*D* square out in under the web for the gland.

The head will now be ready to turn over, and the tool positions in the line sketch, Fig. 60, will suggest the manner of finishing the other side.

The idea to be conveyed is that these successive steps, relative to a reasonable, accurate and economical production, to be effective, must result from an effort of willingness and judgment on the part of the operator and can be made a very profitable combination.

The correct shapes and proper positions of tools are matters for careful study, as is also the cutting over as much surface as possible without frequent changing of tools. In the case of the cylinder head, note that most facing cuts are on right head, and vertical cuts on the left side.

Digitized by Google

CHAPTER VI

BORING MILL FIXTURES

The general appearance of the corner of the shop shown in Fig. 61 will almost explain itself. Just to the left of the machine, is a made-

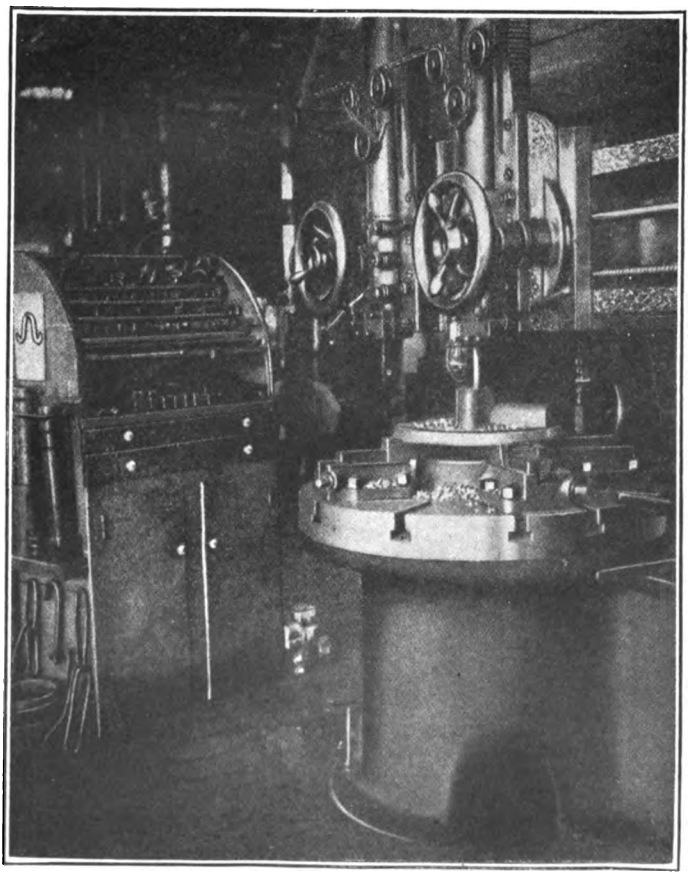

FIG. 61.—Cupboard for boring mill man.

to-order combination mill cupboard and tool shelves, about 5 ft. high at back, 17 inches deep and 32 inches wide.

Digitized by Google

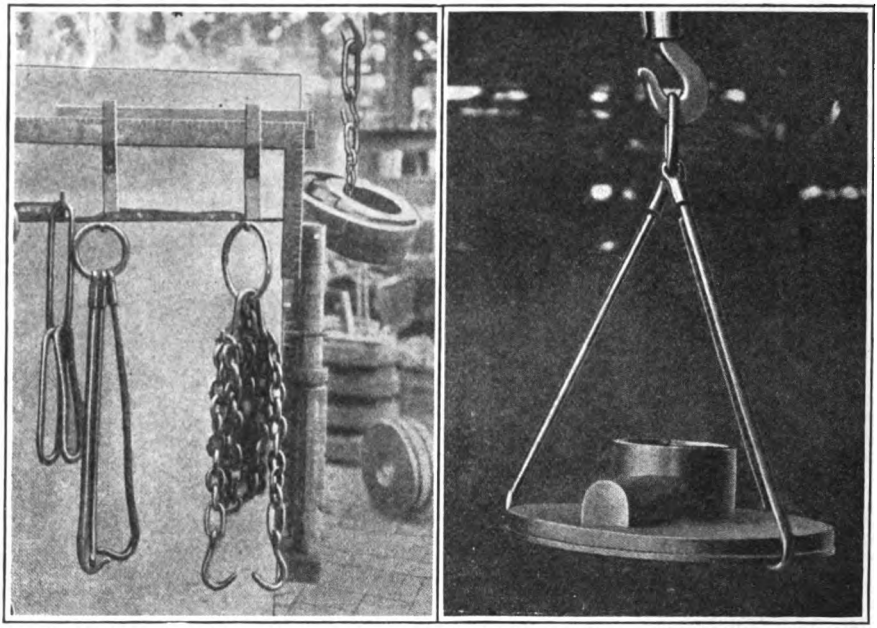

FIGS. 62–63.—Slings for handling work.

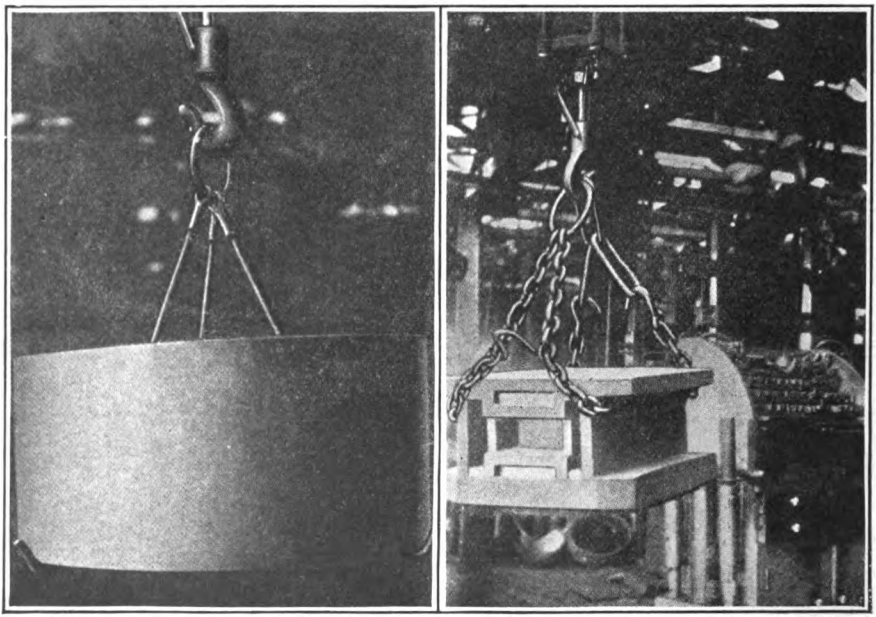

FIGS. 64–65.—More slings and how they are used.

Digitized by Google

The lower portion makes good provision for the workman's clothes and personal effects. The first drawer is for his measuring tools of

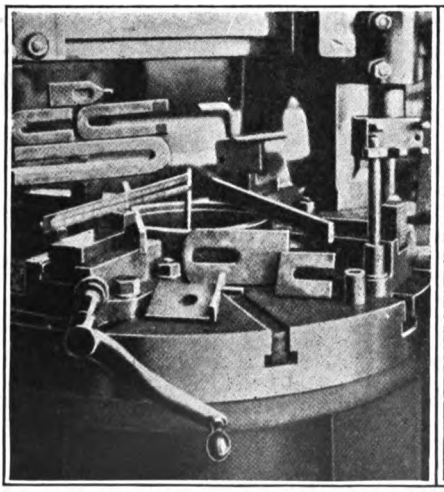

FIG. 66.—Chuck equipment.

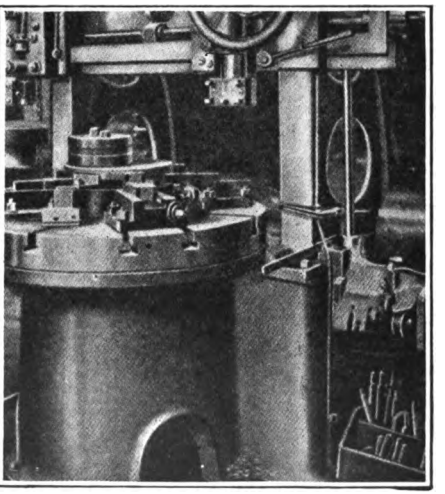

FIG. 67.—Holding an eccentric.

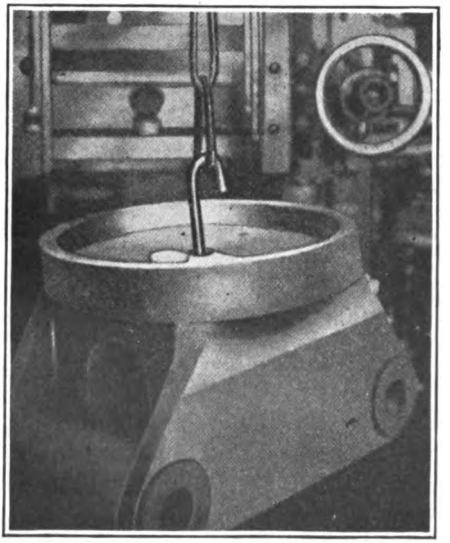

FIG. 68.—A lifting hook.

every kind. The upper drawer is a separate and suitable place for all drawings and data relative to the general class of work, and the open space above the drawers gives room for hammer, chisels, screw

Digitized by Google

wrenches, box of metal liners or shims, parallel blocks, etc. Next are two shallow shelves hardly an inch apart, a safe resting place for "set" calipers, large or small.

Up to and including the top are four cutting-tool shelves, each receding a little. The lower ones are about 2 inches apart and give ample space for plenty of good standard-shape tools and many specials, used as certain jobs require. Thus with the cutting ends of the tools slightly exposed toward the operator, he can at a glance note their

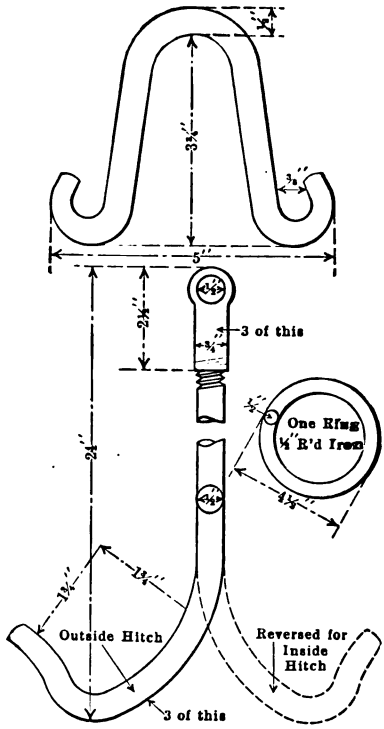

FIG. 69.—Details of tri-hook.

condition and with the left hand choose the shape best suited for the cut, while very naturally the right hand is used with the wrench in placing or removing tools from the machine tool posts.

This arrangement economizes all the space, and for other purposes might well be termed an "all around" cupboard, since all the available space on all sides is utilized for some necessity. On the left-hand end is a 2×4-inch shelf, bolted firmly to the side, supports a set of smaller boring bars and a packing-ring gang tool. Under these is a space to hang hooks and links for hoist tackle.

Digitized by Google

In Fig. 62 is a set of "tri hooks," very useful for lifting all sizes of material passing over the outside of a flange or reversed, and pulling up from the inside of the rim. Fig. 63 shows this lifting a small cylinder head. Fig. 64 shows a cylinder-ring casting with hooks reversed in the lugs on the ring, only tap hooks into lugs freely enough to be moved and swung by hand. Fig. 65 shows the triple straight links as used to lengthen the chains around the driving-box flanges while at the top edge. The box chains are contracted and held by the "tri kink" to keep from slipping off the bevel corners. A separate

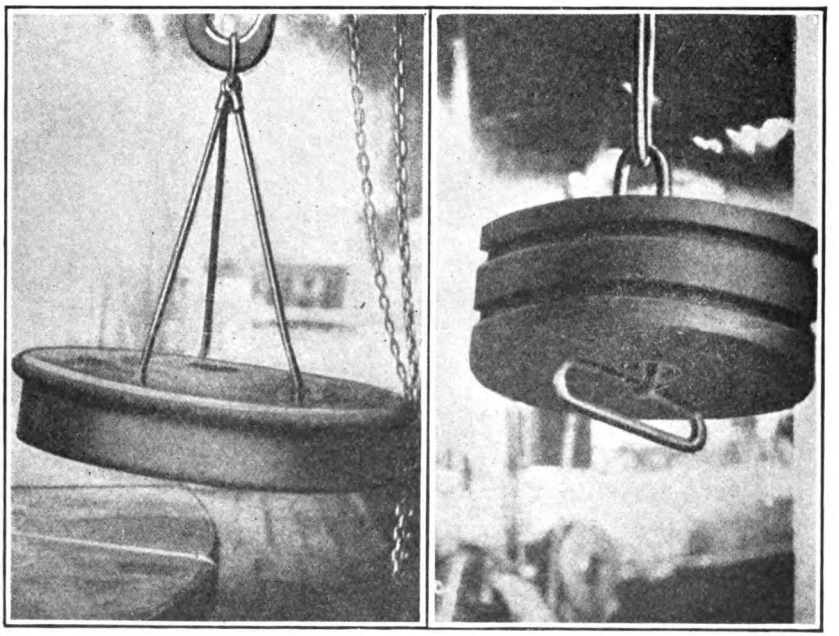

FIGS. 70–71.—Two uses of the tri-hook.

air hoist should be used at each machine, and for adjustable features we find it very convenient to get hoisting rigs that will about let the material clear the table and yet pass under the cross-rail. This is especially true of chuck work where material must go pretty well to the center of the table and be let down inside the jaws.

TABLE AND CHUCK EQUIPMENT

In Fig. 66 is a view of the table at close range, with a sample line of familiar fixtures on display. On top of the left jaw, to the rear, are the old reliable horse-shoe clamps of various sizes and a small

Digitized by Google

straight "toe" clamp on top. On the right jaw, to rear, resting on a wooden block, is a flat, deep, offset clamp; in the front, between both chucks, a very useful style of clamps made from thin ½-inch scrap ends of driving-spring steel plates about ½ inch thick. They are light, and fit into many close places.

In place of bolts for clamping work, excellent results are obtained from the use of small inverted "T" slip blocks sliding freely into

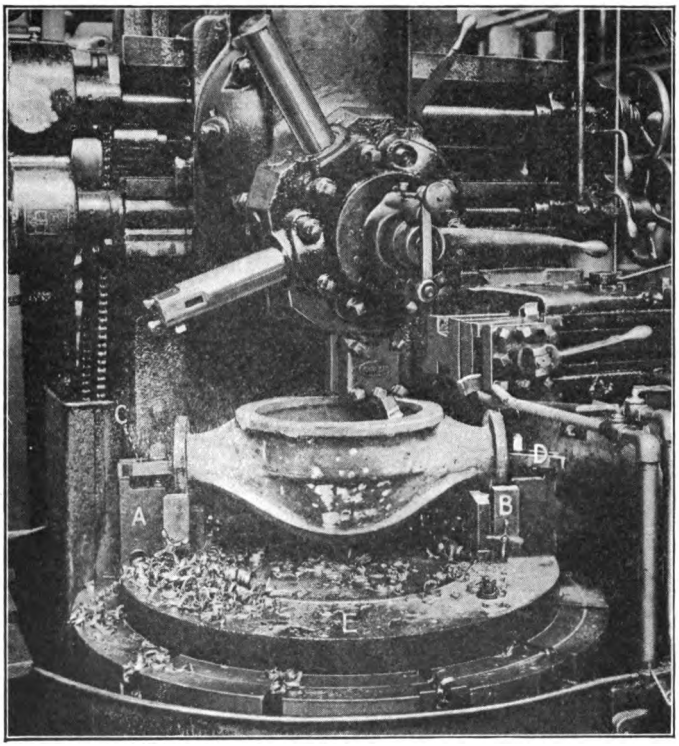

FIG. 72.—Boring truck axle housing.

the table slots, into which they are neatly tapped as occasion requires. Seven-eighths-inch studs are used on all work. Fig 66 shows the construction. Notice that one hole is tapped near the end. This is done to let some very large work just overhang the edge of the table a very little. Along toward the right side of the table is a block projecting out of the slot. It is used, of course, only where clearance between housing and table will permit.

Instead of a great variety of lengths of studs, use double-length ⅞-inch splice nuts. They are very handy.

Digitized by Google

Suppose we have just finished boring out a 33-inch car wheel; and that an 18-inch cylinder head, 1¼ inches thick on the outside rim, is to be turned up and the gland bored out. Place a small center indicator in the center of table with a spindle ½ inch round, body 3 inches round with a flanged base that fits in the hole. In using the center spindle to set jaws, it is only necessary to deduct half the diameter of the total job. In this case all jaws would show 8¾ inches or, if more convenient, cut out a little notch in the spindle down just to the center, keeping this notch always turned toward the jaw to be set, and make all 9 inches to center.

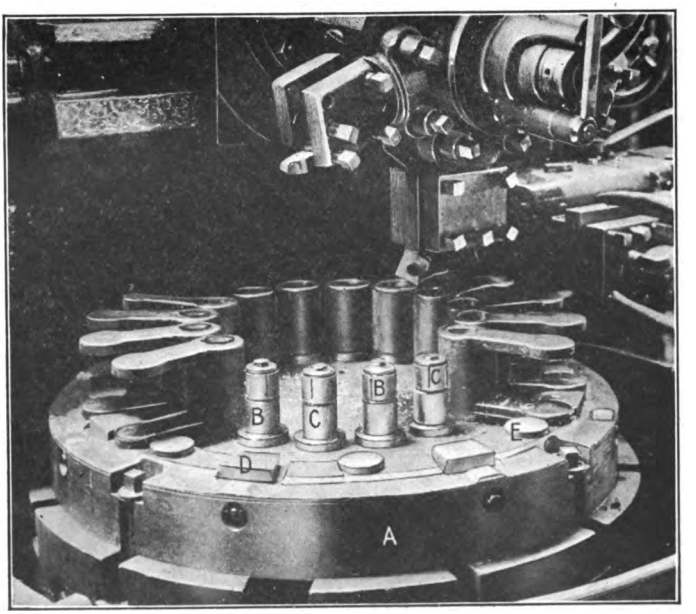

FIG. 73.—Multiple fixture for facing spring shackles.

A 3-ft. 4-fold rule is very convenient about a boring mill, as a great portion of the work exceeds 2 ft. and in making different calculations the 3-ft. rule is very handy.

Generally the chuck jaws are bolted to the table about 2 inches from the outside edge, and are seldom entirely removed from table. In some face-plate work not suited to a chuck, the work is laid right on top of the chuck after the jaws are removed. They are all parallel, and the labor of removing them is saved. When a chucking job is smaller than the inside ends of the chucks, use a parallel ring laid flat on the table and, if the job requires, use parallel strips on top of

Digitized by Google

this to give proper height for chuck-jaw contact; also to bridge over from the ring to the face of the jaws until properly set and secured. Thus for different weights and sizes of jobs as much chuck contact can be given as needed. In Fig. 66 the longer parallel strips are used only on some lighter work where the cut is liable to depress the work in facing off; otherwise small pieces of cylinder packing rings make excellent strips and can be made of various thicknesses to suit.

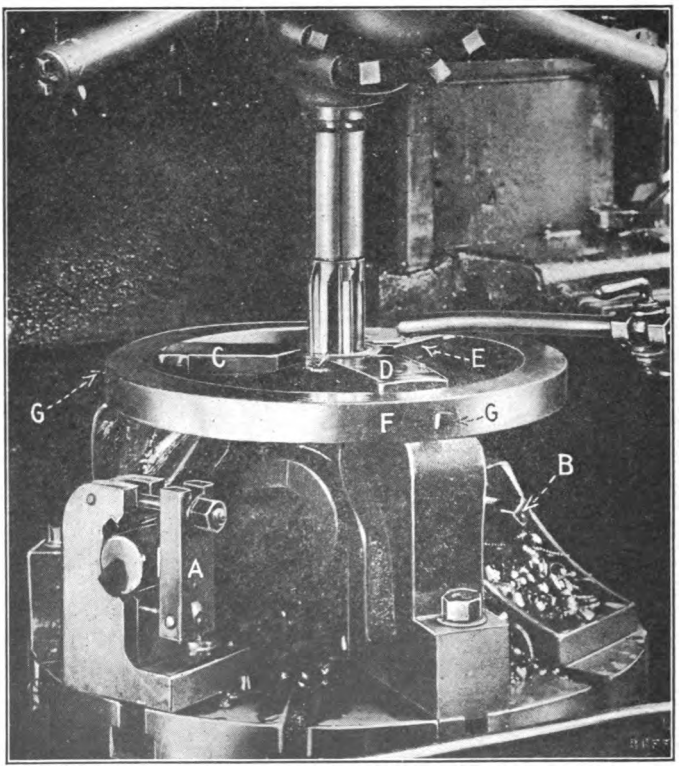

FIG. 74.—Reinforcing ring for chuck.

In Fig. 67 is an eccentric turning jig, set up in the same manner with about 1 inch contact; it is further secured from any vertical lifting effect by screwing up the chuck jaws and by the steel offset toe clamp, bolting them down to the strips, ring and table. Also in this same figure, under the right-hand feed box, can be seen a handy partitioned rack for studs, clamps, etc.

The brake may be applied by the right hand at the lever handle appearing in front of the right housing, which extends to the inside

Digitized by Google

of the cone-drive pulley. Or a foot brake is further applied by pressing down on the small projecting iron pipe lever just appearing from the base of the machine at the left. It runs across the front of the machine and pulls down on the ¼-inch iron rod seen just in front of the right feed box. Good stopping devices are as essential as the power.

In this blocking up, parallel but sliding taper wedge blocks are used, making it very secure and keeping the work from crowding down in the chuck.

Fig. 68 is another view of a hoisting feature which is very con-

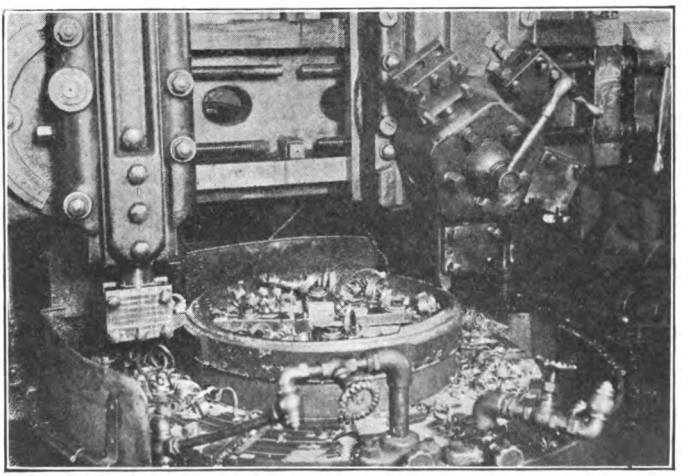

FIG. 75.—Holding ring on inside.

venient when core holes are allowed. A bent hook stud is used with a large washer and an inch nut run on from the bottom. It is effective and quickly applied.

The usefulness of the "tri" hook cannot be fully appreciated until tried. Fig. 69 shows all dimensions. It can be used in many places and on practically all hoisting work.

Figs. 70 and 71 show two applications of hoisting hooks, the latter a very neat scheme for handling work with a hole through it. This consists of two or three links as needed, which are dropped through the hole and the lower one turned across the opening to act as a bar. It has the advantage of not being lost or mislaid, as a wrench or other separate piece might be.

Digitized by Google

THREE MOTOR TRUCK JOBS

Three interesting boring mill jobs from a leading motor truck shop are shown in Figs. 72 and 74. The rear axle housing shown in Fig. 72 is held in V blocks *A* and *B* and clamped with straps *C* and *D*. The whole fixture is mounted on the base plate *E* which is bolted to the boring mill table. This is a Bullard vertical turret and shows the use of the turret tools and also of the tool in the side carriage.

Another interesting, but entirely different job, is the turning or facing of the spring shackles in Fig. 73. These are first bored to fit

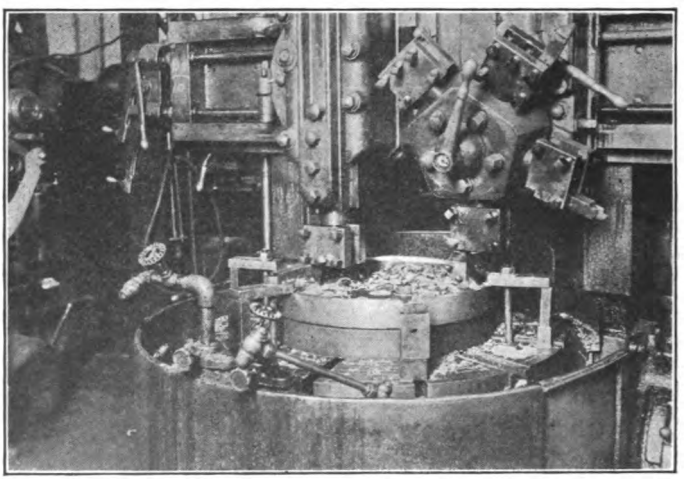

FIG. 76—Boring the same ring.

the studs mounted on the base *A*. The studs expand into the hole and prevent any lifting tendency due to the rake of the cutting tool. The wedges *D* force the lower ears against the stops *E*. The studs also hold the shackles square with the table and insure the sides being at right angles to the holes.

The holding device shown in Fig. 74 is particularly suggestive and can be applied to many cases where heavy work is to be held. This is the steering knuckle of a heavy truck, the stub axle end being centered and held at *A*, while the screw *B* takes care of the other end. The three jaws, *C*, *D* and *E* center the forging for the spindle bore. These jaws can be given a powerful grip by means of the set screws *G* in the reinforcing ring *F*. This supports the jaws and effectually prevents the spring which would be inevitable without the supporting ring.

Digitized by Google

The finishing of a steel ring is shown in Figs. 75 and 76. Fig. 75 shows the first operation in which the ring is held on the inside while being faced and turned on the outside. Fig. 76 shows the same ring clamped by the outside while the inside is being bored and faced. The methods of clamping are shown in both cases.

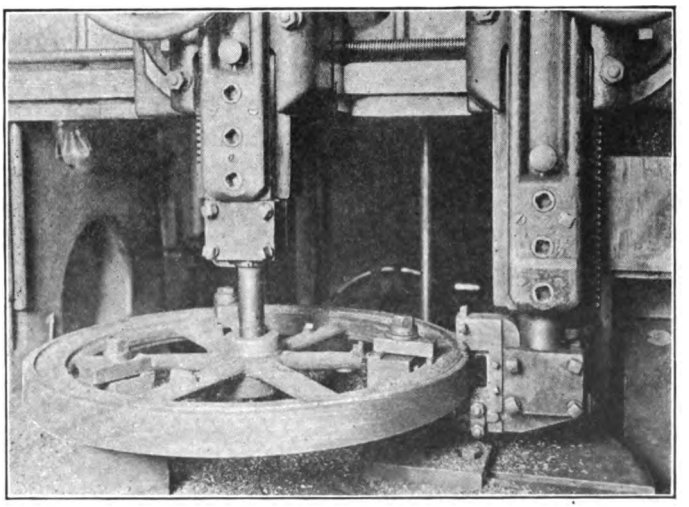

FIG. 77.—Boring and turning fly-wheel.

Another form of work, which includes boring and turning, is shown in Fig. 77. Here the hub is being bored and the outside turned with a hook tool. The rim is being turned on each side by the straddle tool which also carries a form tool for finishing the rim and rounding the corners. The method of holding is also of interest.

Digitized by Google

Digitized by Google

INDEX

A

Acme threads, 63
Angle plates, 27
Arbors, centering, 72
Automatic screw machine, Pratt & Whitney, 115, 139
  setting up, 199
Automobile work, 97, 102, 104
  on boring mill, 332–336

B

Back rests, 220
Boring bars, 36
  taper, 40, 46
  tools, 34
Boring machines and their work, 285
  names of parts, 286
  mill fixtures, 327–334
  mills, 285
    names of parts, 287
  rapid, 102
Box tools, types of, 216–217
Brown & Sharpe automatic, 140–167
  camming, 156–167
  sizes of machines, 155
Button dies, 243

C

Cam cutting on boring machine, 303
Camming Pratt & Whitney automatic, 115–139
Care of lathe, 73
  spindle, 75
Cast-iron work, 222
Catching threads, 52
Center drills, sizes of, 9–10, 88
  reamer, 9
  square, the, 5
Centers, special, 12
Centering bar work, 4
  device for lathe, 8
Chasers for threads, 65
Chatter, 37
Chip room, 282
Chips clinging to tools, why, 278
Chucks, lathe, 30–34
  and their uses, 320
Cleveland automatic, 168–179
  cam arrangement, 171–173
Collets or split chucks, 32
Compounding gears, 52
Compound rests, setting, 47
Cone centering method, 7
Cooling liquids, 280
Counterbores, for drilling machines, 87
  drills, etc., 228
Cutting center, 7
  speeds, 280
    and feeds, 22
    for screw machines, 202
Cylinder heads, on vertical boring mill, 324–326

D

Die holders, 250
Double threads, 59
Dovetail tools, 264
Drawing chisel, 6
Drill sizes, 84
Drills, counterbores, etc., 228
  feed of, 83
  grinding, 77–82
  guiding, 92–95
  speed of, 82
  tap, 85
Drilling and reaming data, 38, 207, 208
  fixtures, 92
  kinks, 90
  machines, 77
    parts of, 78, 79
Driving boxes, holding, 322
  work in lathe, 14, 15

F

Face plate, indexing for multiple threads, 59

Digitized by Google

Face plate work, 24
bridle for, 28
plates, 34
Facing and turning, 18–20
Feeds for screw machines, 118, 202
Finishing ends of work, 69
Follower rests, 23
Forming and turning, 269
tools and methods of making, 253
tool speeds, 206
Franklin Institute thread, 58

G

Grinding drills, 77–82

H

Hermaphrodite caliper, 4
Hollow mills, proportions of, 224
speeds and feeds, 205
Hub liner kink, 98

I

Indexing face plate for multiple threads, 59
Indicator for lathe, 68
Internal threading, 245

K

Knurling tools—see Nurling tools, 274

L

Lathe centers, 10
special, 12
dogs, 14–16
indicator, 68
tools, 21
Laying out holes, 26
forming tools, 256
Lead and pitch, 55

M

Machining pulleys on drilling machine, 96–100
Mandrels, centering, 71
Master tools and templets, 262
Milling pulleys on drilling machine, 96
Motor truck work, 336
Multiple thread cutting, 59–62

N

National-Acme multiple spindle automatic, 180–196
tools, 193
Nurling tools and their application, 274

O

Oiling drills, 91

P

Pitch and lead, 55
Pratt & Whitney machine, 105, 110, 115
camming, 115–139
Pulleys, turning on drilling machine, 96–100

R

Railroad shop drilling, 98
work on horizontal machine, 297–302
on vertical boring mill, 312–318, 320–331
Rake of tools, 280
Rapid boring, 102
Reamers and reamer holders, 232–235
Reaming and drilling, 38
Reaming speeds, 207, 209
Reboring spindle nose, 98
Re-threading axle housing, 97
Recessing tools, 235
Rests, follower and steady, 23

S

Screw chucks, 34
machine taps and dies, 237
machines, hand, 105
tools for, 107, 150, 151, 175, 193, 197
slotting attachment, B. & S., 153
threads, proportions of, 60–64
Self-centering punch, 5
Sellers thread, 58
Semi-automatic machines, Potter & Johnston, 197
Setting-up automatic screw machines, 199
Sharpening drills, 77–82
Sizes of drills, 84
Small drills for watches, 87
Spotting tool, 88
Special chuck for large work, 27
chucks, 31–34
Speeds and feeds for screw machine work, 202

Digitized by Google

Spherical boring, 318
Split chucks, 32
Spotting and facing tools, 228
Spring collets and feed chucks, 211
Spring dies, 239–248
Square threads, 62
Steady rests, 23

T

Tap and die speeds, 209
drill sizes, 85–86
Taps and dies for screw machines, 237
Tapers, figuring, 42
table of, 49
turning, 40–47
Taper threads, 46
work, points on, 46
turning tools, 224
Tapping, 245
Testing forming tools, 264
lead screw accuracy, 66
Thread cutting, 44–48
figuring gears for, 50-54
rapid, 53
Threads, Acme, 63
B. & S. worm, 64
double, 59
measuring, 54
proportions of, 60–64
single, 50
Threads, square, 62
triple, 59
Threading axle housing, 97
plugs, 99
slender work, 66
speeds and feeds, 209
tools, 37, 46, 56, 65
Tools and turning, 17
height of, 17
overhang, avoid, 17
Tool board for lathe, 75
holders, 35
posts for forming tools, 266
setter for boring bars, 306
Tools for screw machines, 107, 150, 151, 175, 193, 216
Tri-hook for lifting work, 330
Triple threads, 59
Turning taper, 40
tools, 21
Turret lathes, 105–108

U

U. S. S. thread, 58

V

Vertical boring mill and its work, 309

W

Warner & Swazey machine, 112
Worm threads, 64

Digitized by Google

Digitized by Google

Digitized by Google

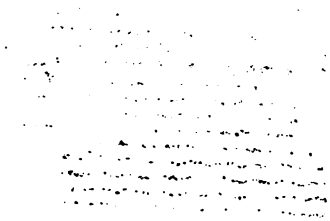

Digitized by Google